2026, Jericho Design Group, LLC. These drawings are protected by the copyright laws of the United States. These drawings or any part thereof may not be used for any purpose or reproduced in any form or by any means without the written consent of Doug Shaw.

Design No. U419

March 2, 2022

Nonbearing Wall Ratings — 1, 2, 3 or 4 Hr (See Items 4 & 5 through 5J)

*** Indicates such products shall bear the UL or cUL Certification Mark for jurisdictions employing the UL or cUL Certification (such as Canada), respectively.**

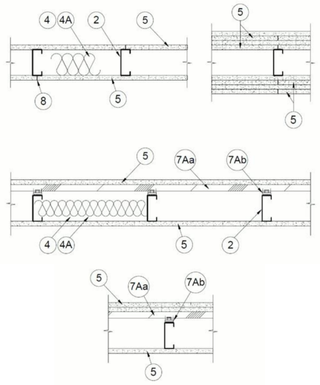

1. **Floor and Ceiling Runners —** (Not Shown) — For use with Item 2 — Channel shaped, fabricated from min 25 MSG corrosion-protected steel, min depth to accommodate stud size, with min 1-1/4 in. long legs, attached to floor and ceiling with fasteners 24 in. OC max.

1A. **Framing Members* — Floor and Ceiling Runner —** Not Shown — In lieu of Item 1 — For use with Item 2B, proprietary channel shaped runners, 3-5/8 in. deep attached to floor and ceiling with fasteners 24 in. OC max.
CALIFORNIA EXPANDED METAL PRODUCTS CO — Viper25™ Track

CRACO MFG INC — SmartTrack25™

MARINO/WARE, DIV OF WARE INDUSTRIES INC — Viper25™ Track

IMPERIAL MANUFACTURING GROUP INC — Viper25™ Track

1B. **Framing Members* — Floor and Ceiling Runner —** Not Shown — In lieu of Item 1 — For use with Item 2C, proprietary channel shaped runners, 1-1/4 in. wide by 3-5/8 in. deep fabricated from min 0.018 in. thick galv steel, attached to floor and ceiling with fasteners spaced 24 in. OC max.
CALIFORNIA EXPANDED METAL PRODUCTS CO — Viper20™ Track

MARINO/WARE, DIV OF WARE INDUSTRIES INC — Viper20™ Track

IMPERIAL MANUFACTURING GROUP INC — Viper20™ Track

1C. **Framing Members* — Floor and Ceiling Runners —** (Not Shown) — In lieu of Item 1 — Channel shaped, attached to floor and ceiling with fasteners 24 in. OC. max.
ALLSTEEL & GYPSUM PRODUCTS INC — Type SUPREME D24/30EQD and Type SUPREME D20

CONSOLIDATED FABRICATORS CORP, BUILDING PRODUCTS DIV — Type SUPREME D24/30EQD and Type SUPREME D20

QUAIL RUN BUILDING MATERIALS INC — Type SUPREME D24/30EQD and Type SUPREME D20

SCAFCO STEEL STUD MANUFACTURING CO — Type SUPREME D24/30EQD and Type SUPREME D20

STEEL CONSTRUCTION SYSTEMS INC — Type SUPREME D24/30EQD and Type SUPREME D20

TELLING INDUSTRIES L L C — Type SUPREME D24/30EQD and Type SUPREME D20

UNITED METAL PRODUCTS INC — Type SUPREME D24/30EQD and Type SUPREME D20

1D. **Floor and Ceiling Runners —** (Not Shown) — For use with Item 2A — Channel shaped, fabricated from min 20 MSG corrosion-protected or galv steel, min depth to accommodate stud size, with min 1 in. long legs, attached to floor and ceiling with fasteners spaced max 24 in. OC.

1E. **Framing Members* — Floor and Ceiling Runners —** (Not Shown, As an alternate to Item 1) — For use with Items 2E, 5F or 5G or 5I only, channel shaped, fabricated from min. 0.015 in. (min bare metal thickness) galvanized steel, attached to floor and ceiling with fasteners 24 in. OC. max.
CLARKDIETRICH BUILDING SYSTEMS — CD ProTRAK

DMFCWBS L L C — ProTRAK

MBA METAL FRAMING — ProTRAK

RAM SALES L L C — Ram ProTRAK

STEEL STRUCTURAL PRODUCTS L L C — Tri-S ProTRAK

1F. **Framing Members* — Floor and Ceiling Runner —** Not Shown — In lieu of Item 1 — For use with Item 2F, proprietary channel shaped runners, minimum width to accommodate stud size, with 1- 1/8 in. long legs fabricated from min 0.015 in. (min bare metal thickness) galv steel, attached to floor and ceiling with fasteners spaced 24 in. OC max.
SUPER STUD BUILDING PRODUCTS — The Edge

1G. **Framing Members* — Floor and Ceiling Runner —** For use with Item 2G, proprietary channel shaped runners, minimum width to accommodate stud size attached to floor and ceiling with fasteners 24 in. OC max.

STUDCO BUILDING SYSTEMS — CROCSTUD Track

1H. **Floor and Ceiling Runners —** (Not Shown) — Channel shaped, fabricated from min 0.02 in. galv steel, min width to accommodate stud size, with min 1 in. long legs, for use with studs specified below and fabricated from min 0.018 in. galv steel or thicker, attached to floor and ceiling with fasteners spaced max 24 in. OC.
MARINO/WARE, DIV OF WARE INDUSTRIES INC — Viper20™ Track VT100

IMPERIAL MANUFACTURING GROUP INC — Viper20™ Track VT100

1I. **Framing Members* — Floor and Ceiling Runners —** (Not Shown, As an alternate to Item 1) — For use with Items 2H, channel shaped, fabricated from min. 0.015 in. (min bare metal thickness) galvanized steel, attached to floor and ceiling with fasteners 24 in. OC. max.
TELLING INDUSTRIES L L C — TRUE-TRACK™

1J. **Framing Members* — Floor and Ceiling Runner —** Not Shown — In lieu of Item 1 — For use with Item 2I, proprietary channel shaped runners, 3-5/8 in. deep attached to floor and ceiling with fasteners 24 in. OC max.

1K. **Framing Members* — Floor and Ceiling Runner —** Not Shown — In lieu of Item 1 — For use with Item 2J, proprietary channel shaped runners, 1-1/4 in. wide by 3-5/8 in. deep fabricated from min 0.018 in. thick galv steel, attached to floor and ceiling with fasteners spaced 24 in. OC max.

1L. **Framing Members* — Floor and Ceiling Runner —** Not Shown — In lieu of Item 1 — For use with Item 2N, proprietary channel shaped runners, 1-1/4 in. wide by min. 3-1/2 in. deep fabricated from min 0.018 in. thick galv steel, attached to floor and ceiling with fasteners spaced 24 in. OC max.
RESCUE METAL FRAMING, L L C — AlphaTRAK

1M. **Framing Members* — Floor and Ceiling Runners —** Not Shown — As an alternate to Item 1 — For use with Item 2O, proprietary channel shaped runners, min width to accommodate stud size, galv steel, attached to floor and ceiling with fasteners spaced 24 in. OC max.
RONDO BUILDING SERVICES PTY LTD — Rondo Wall Track

1N. **Framing Members* — Floor and Ceiling Runners —** Not Shown — As an alternate to Item 1 — For use with Item 2P, proprietary channel shaped runners, min width to accommodate stud size, galv steel, attached to floor and ceiling with fasteners spaced 24 in. OC max.
OEG BUILDING MATERIALS — OEG Track

1O. **Framing Members* — Floor and Ceiling Runner —** Not Shown — In lieu of Item 1 — For use with Item 2Q, proprietary channel shaped runners, min width to accommodate stud size, fabricated from min. 25 MSG (0.018 in. min. bare metal thickness), attached to floor and ceiling with fasteners spaced 24 in. OC max.
CALIFORNIA EXPANDED METAL PRODUCTS CO — Viper X Track

2. **Steel Studs —** Channel shaped, fabricated from min 25 MSG corrosion-protected steel, min depth as indicated under Item 5, spaced a max of 24 in. OC. Studs to be cut 3/8 to 3/4 in. less than assembly height.

2A. **Steel Studs —** (As an alternate to Item 2, For use with Items 5B, 5E, 5H, 5J or Type ULIX) — Channel shaped, fabricated from min 20 MSG corrosion-protected or galv steel, 3-1/2 in. min depth, spaced a max of 16 in. OC. Studs friction-fit into floor and ceiling runners. Studs to be cut 5/8 to 3/4 in. less than assembly height.

2B. **Framing Members* - Steel Studs —** (As an alternate to Item 2, For use with Items 5C, 5I or Type ULIX) — Proprietary channel shaped studs, 3-5/8 in. deep spaced a max of 24 in. OC. Studs to be cut 3/4 in less than the assembly height and installed with a 1/2 in. gap between the end of the stud and track at the bottom of the wall. For direct attachment of gypsum board only.
CALIFORNIA EXPANDED METAL PRODUCTS CO — Viper25™

CRACO MFG INC — SmartStud25™

MARINO/WARE, DIV OF WARE INDUSTRIES INC — Viper25™

IMPERIAL MANUFACTURING GROUP INC — Viper25™

2C. **Framing Members* — Steel Studs —** Not Shown — In lieu of Item 2 — proprietary channel shaped steel studs, min depth as indicated under Item 5, spaced a max of 24 in. OC, fabricated from min 0.018 in. thick galv steel. Studs cut 3/8 in. to 3/4 in. less in lengths than assembly heights.
CALIFORNIA EXPANDED METAL PRODUCTS CO — Viper20™

MARINO/WARE, DIV OF WARE INDUSTRIES INC — Viper20™

IMPERIAL MANUFACTURING GROUP INC — Viper20™

2D. **Framing Members* — Steel Studs —** In lieu of Item 2 — Channel shaped studs, min depth as indicated under Item 5, spaced a max of 24 in. OC. Studs to be cut 3/4 in. less than assembly height.
ALLSTEEL & GYPSUM PRODUCTS INC — Type SUPREME D24/30EQD and Type SUPREME D20

CONSOLIDATED FABRICATORS CORP, BUILDING PRODUCTS DIV — Type SUPREME D24/30EQD and Type SUPREME D20

QUAIL RUN BUILDING MATERIALS INC — Type SUPREME D24/30EQD and Type SUPREME D20

SCAFCO STEEL STUD MANUFACTURING CO — Type SUPREME D24/30EQD and Type SUPREME D20

STEEL CONSTRUCTION SYSTEMS INC — Type SUPREME D24/30EQD and Type SUPREME D20

TELLING INDUSTRIES L L C — Type SUPREME D24/30EQD and Type SUPREME D20

UNITED METAL PRODUCTS INC — Type SUPREME D24/30EQD and Type SUPREME D20

2E. **Framing Members* — Steel Studs —** (Not Shown, As an alternate to Item 2) — For use with Items 5F or 5G or 5I or Type ULIX only, channel shaped studs, min depth as indicated under Item 5F, 5G or 5I, fabricated from min. 0.015 in. (min bare metal thickness) galvanized steel, spaced a max of 24 in. OC. Studs to be cut 3/4 in. less than assembly height.
CLARKDIETRICH BUILDING SYSTEMS — CD ProSTUD

DMFCWBS L L C — ProSTUD

MBA METAL FRAMING — ProSTUD

RAM SALES L L C — Ram ProSTUD

STEEL STRUCTURAL PRODUCTS L L C — Tri-S ProSTUD

2F. **Framing Members* — Steel Studs —** Not Shown — In lieu of Item 2 — proprietary channel shaped steel studs, minimum width indicated under Item 5, 1-1/4 in. deep fabricated from min 0.015 in. (min bare metal thickness) galvanized steel. Studs 3/8 in. to 3/4 in. less in lengths than assembly heights.
SUPER STUD BUILDING PRODUCTS — The Edge

2G. **Framing Members* — Steel Studs —** Not Shown — In lieu of Item 2 — proprietary channel shaped studs, minimum width indicated under Item 5, Studs to be cut 3/8 to 3/4 in less than the assembly height.
STUDCO BUILDING SYSTEMS — CROCSTUD

2H. **Framing Members* — Steel Studs —** (Not Shown, As an alternate to Item 2) — Fabricated from min. 0.015 in. (min bare metal thickness) galvanized steel, spaced a max of 24 in. OC. Studs to be cut 3/4 in. less than assembly height.
TELLING INDUSTRIES L L C — TRUE-STUD™

2I. **Framing Members* — Steel Studs —**

2J. **Framing Members* — Metal Studs —** Not Shown — In lieu of Item 2 — proprietary channel shaped steel studs, min depth as indicated under Item 5, spaced a max if 24 in. OC, fabricated from min 0.018 in. thick galv steel. Studs cut 3/8 in. to 3/4 in. less in lengths than assembly heights

2K. **Framing Members* — Steel Studs —** As an alternate to Item 2 — For use with Item 1, channel shaped studs, fabricated from min 25 MSG corrosion-protected steel, min depth as indicated under Item 5, spaced a max of 24 in. OC. Studs to be cut 3/8 to 3/4 in. less than assembly height.
EB METAL INC — NITROSTUD

2L. **Framing Members* — Steel Studs —** As an alternate to Item 2 — For use with Item 1, channel shaped studs, fabricated from min 25 MSG corrosion-protected steel, min depth as indicated under Item 5, spaced a max of 24 in. OC. Studs to be cut 3/8 to 3/4 in. less than assembly height.
OLMAR SUPPLY INC — PRIMESTUD

2M. **Framing Members* — Steel Studs —** As an alternate to Item 2 — For use with Item 1, channel shaped studs, fabricated from min 25 MSG corrosion-protected steel, min depth as indicated under Item 5, spaced a max of 24 in. OC. Studs to be cut 3/8 to 3/4 in. less than assembly height.
MARINO/WARE, DIV OF WARE INDUSTRIES INC — StudRite™

2N. **Framing Members*— Steel Studs —** As an alternate to Item 2 — proprietary channel shaped steel studs, min depth 3-1/2 in. and as indicated under Item 5, spaced a max of 24 in. OC, fabricated from min 0.018 in. thick galv steel. Studs cut 3/8 in. to 3/4 in. less in length than assembly height.
RESCUE METAL FRAMING, L L C — AlphaSTUD

2O. **Framing Members* — Steel Studs —** As an alternate to Item 2 — proprietary channel shaped steel studs, min width as indicated under Item 5, galv steel. Studs to be cut 3/8 to 3/4 in. less in lengths than assembly height. Spaced 24 in. OC max.
RONDO BUILDING SERVICES PTY LTD — Rondo Lipped Wall Stud

2P. **Framing Members* — Steel Studs —** As an alternate to Item 2 — proprietary channel shaped steel studs, min width as indicated under Item 5, min 25 MSG galv steel. Studs to be cut 3/8 to 3/4 in. less in lengths than assembly height. Spaced 24 in. OC max.
OEG BUILDING MATERIALS — OEG Stud

2Q. **Framing Members* — Steel Studs —** Not Shown — In lieu of Item 2 — For use with Item 1Q, proprietary channel shaped steel studs, min depth as indicated under Item 5, spaced a max of 24 in. OC, fabricated from min 25 MSG (0.018 in. min. bare metal thickness). Studs cut 3/8 in. to 3/4 in. less in lengths than assembly heights.
CALIFORNIA EXPANDED METAL PRODUCTS CO — Viper X

3. **Wood Structural Panel Sheathing —** (Optional, For use with Item 5 Only) — (Not Shown) — 4 ft wide, 7/16 in. thick oriented strand board (OSB) or 15/32 in. thick structural 1 sheathing (plywood) complying with DOC PS1 or PS2, or APA Standard PRP-108, manufactured with exterior glue, applied horizontally or vertically to the steel studs. Vertical joints centered on studs, and staggered one stud space from wallboard joints. Attached to studs with flat-head self-drilling tapping screws with a min. head diam. of 0.292 in. at maximum 6 in. OC. in the perimeter and 12 in. OC. in the field. When used, gypsum panels attached over OSB or plywood panels and fastener lengths for gypsum panels increased by min. 1/2 in.

4. **Batts and Blankets* —** (Required as indicated under Item 5) — Mineral wool batts, friction fitted between studs and runners. Min nom thickness as indicated under Item 5.
See **Batts and Blankets** (BKNV or BZJZ) Categories for names of Classified companies.

4A. **Batts and Blankets* —** (Optional) — Placed in stud cavities, any glass fiber or mineral wool insulation bearing the UL Classification Marking as to Surface Burning Characteristics and/or Fire Resistance.
See **Batts and Blankets** (BKNV or BZJZ) Categories for names of Classified companies.

4B. **Fiber, Sprayed* —** (Optional, for use with Type ULIX) Where insulation is required - Spray applied granulated mineral fiber material. The fiber is applied with adhesive at a minimum density of 4.0 pcf to completely fill the wall cavity in accordance with the application instructions supplied with the product. See **Fiber, Sprayed** (CCAZ).
AMERICAN ROCKWOOL MANUFACTURING, LLC — Type Rockwool Premium Plus

4C. **Foamed Plastic* —** (Where Batts and Blankets*, Item 4, are optional, for use with Item 5K) — Spray applied, foamed plastic insulation, at any thickness from partial fill to completely filling stud cavity, for 2 hour rated assemblies only. When foamed plastic is used, minimum stud depth shall be 3-1/2 in.

CARLISLE SPRAY FOAM INSULATION — Types SealTite Pro Closed Cell (CC), SealTite Pro Open Cell (OC), SealTite Pro OCX, SealTite Pro No Trim 21, SealTite Pro One Zero, Foamulate Closed Cell, Foamulate OCX, Foamulate 70, and Foamulate HFO.

5. **Gypsum Board* —** Gypsum panels with beveled, square or tapered edges, applied vertically or horizontally. Vertical joints centered over studs and staggered one stud cavity on opposite sides of studs. Vertical joints in adjacent layers (multilayer systems) staggered one stud cavity. Horizontal joints need not be backed by steel framing. Horizontal edge joints and horizontal butt joints on opposite sides of studs need not be staggered. Horizontal edge joints and horizontal butt joints in adjacent layers (multilayer systems) staggered a min of 12 in. Horizontal edge joints and horizontal butt joints in adjacent layers (multilayer systems) with Type ULIX need not be staggered. The thickness and number of layers for the 1 hr, 2 hr, 3 hr and 4 hr ratings are as follows:

Gypsum Board Protection on Each Side of Wall

Rating, Hr	Min Stud Depth, in. Items 2, 2C, 2D, 2F, 2G, 2O	No. of Layers & Thkns of Panel	Min Thkns of Insulation (Item 4)
1	3-1/2	1 layer, 5/8 in. thick	Optional
1	2-1/2	1 layer, 1/2 in. thick	1-1/2 in.
1	1-5/8	1 layer, 3/4 in. thick	Optional
2	1-5/8	2 layers, 1/2 in. thick	Optional
2	1-5/8	2 layers, 5/8 in. thick	Optional
2	3-1/2	1 layer, 3/4 in. thick	3 in.
3	1-5/8	3 layers, 1/2 in. thick	Optional
3	1-5/8	2 layers, 3/4 in. thick	Optional
3	1-5/8	3 layers, 5/8 in. thick	Optional
4	1-5/8	4 layers, 5/8 in. thick	Optional
4	1-5/8	4 layers, 1/2 in. thick	Optional
4	2-1/2	2 layers, 3/4 in. thick	2 in.

CGC INC — 1/2 in. thick Type C, IP-X2 or IPC-AR; WRC, 5/8 in. thick Type AR, C, IP-AR, IP-X1, IP-X2, IPC-AR, SCX, SHX, ULIX, WRX or WRC; 3/4 in. thick Types IP-X3 or ULTRACODE

THE SIAM GYPSUM INDUSTRY (SONGKHLA) CO — 1/2 in. thick Type C and 5/8 in. thick Type SCX

UNITED STATES GYPSUM CO — 1/2 in. thick Type C, IP-X2, IPC-AR or WRC; 5/8 in. thick Type SCX, SGX, SHX, ULIX, WRX, IP-X1, AR, C, WRC, FRX-G, IP-AR, IP-X2, IPC-AR; 3/4 in. thick Types IP-X3 or ULTRACODE

USG BORAL DRYWALL SFZ LLC — 1/2 in. Type C; 5/8 in. Types C, SCX, SGX, ULTRACODE

USG MEXICO S A DE C V — 1/2 in. thick Type C, IP-X2, IPC-AR or WRC; 5/8 in. thick Type AR, C, IP-AR, IP-X1, IP-X2, IPC-AR, SCX, SHX, WRX, WRC or; 3/4 in. thick Types IP-X3 or ULTRACODE

When Item 7B, **Steel Framing Members***, is used, Nonbearing Wall Rating is limited to 1 Hr. Min. stud depth is 3-1/2 in., min. thickness of insulation (Item 4) is 3 in., and two layers of gypsum board panels (1/2 in. or 5/8 in. thick) shall be attached to furring channels as described in Item 6. One layer of gypsum board panels (1/2 in. or 5/8 in. thick) attached to opposite side of stud without furring channels as described in Item 6.

5A. **Gypsum Board* —** (As an alternate to Item 5) — 5/8 in. thick, 24 to 54 in. wide, applied horizontally as the outer layer to one side of the assembly. Secured as described in Item 6.
CGC INC — Type SHX.

UNITED STATES GYPSUM CO — Type FRX-G, SHX.

USG MEXICO S A DE C V — Type SHX.

5B. **Gypsum Board* —** (Not Shown) — As an alternate to Item 5 when used as the base layer on one or both sides of wall when 5/8 in or 3/4 in. thick products are specified. For direct attachment only to steel studs Item 2A, (not to be used with Item 3) — Nom 5/8 in. or 3/4 in. may be used as alternate to all 5/8 in. or 3/4 in. shown in Item 5, Wallboard Protection on Each Side of Wall table. Nom 5/8 in. or 3/4 in. thick lead backed gypsum panels with beveled, square or tapered edges, applied vertically. Vertical joints centered over studs and staggered min 1 stud cavity on opposite sides of studs. Gypsum board secured to 20 MSG steel studs Item 2A with 1-1/4 in. long Type S-12 steel screws spaced 8 in. OC at perimeter and 12 in. OC in the field. To be used with Lead Batten Strips (see Item 11) or Lead Discs or Tabs (see Item 12).
RAY-BAR ENGINEERING CORP — Type RB-LBG

5C. **Gypsum Board* —** (For Use With Item 2B) — Rating Limited to 1 Hour. 5/8 in. thick, 48 in. wide, Gypsum panels with beveled, square or tapered edges, applied vertically or horizontally. (Vertical Application) - The gypsum board is to be installed on each side of the studs with 1 in. long Type S coated steel screws spaced 8 in. OC starting 4 in. from the edge of the board at the vertical edges and 12 in. OC starting 6 in. from the edge of the board at the center of each board. Gypsum boards are to be secured to the top and bottom track with screws spaced 8 in. OC starting 4 in. from the board edge. Fasteners shall not penetrate through both the stud and the track at the same time. Vertical joints are to be centered over studs and staggered one stud cavity on opposite sides of studs. (Horizontal Application) - The gypsum board is to be installed on each side of the studs with 1 in. long Type S coated steel screws spaced 8 in. OC starting 4 in. from the edge of the board at the vertical edges and 12 in. OC starting 6 in. from the edge of the board at the center of each board. Gypsum boards are to be secured to the top and bottom track with screws spaced 8 in. OC starting 4 in. from the board edge. Fasteners shall not penetrate through both the stud and the track at the same time. All horizontal joints are to be backed as outlined under section VI of Volume 1 in the Fire Resistive Directory.
CGC INC — Type SCX, ULIX.

THE SIAM GYPSUM INDUSTRY (SONGKHLA) CO — Type SCX

UNITED STATES GYPSUM CO — Type SCX, SGX, ULIX.

USG BORAL DRYWALL SFZ LLC — Type SCX

USG MEXICO S A DE C V — Type SCX

5D. **Gypsum Board* —** (As an alternate to Item 5) — 5/8 in. thick, 48 in. wide, applied vertically or horizontally. Secured as described in Item 6. For use with Items 1 and 2 only.
CGC INC — Type USGX

UNITED STATES GYPSUM CO — Type USGX

USG BORAL DRYWALL SFZ LLC — Type USGX

USG MEXICO S A DE C V — Type USGX

5E. **Gypsum Board* —** (Not Shown) — (As an alternate to Item 5 when used as the base layer on one or both sides of wall when 1/2 in. or 5/8 in thick products are specified, For direct attachment only to steel studs Item 2A, not to be used with Item 3): Nominal 5/8 in. thick lead backed gypsum panels with beveled, square or tapered edges, applied vertically. Vertical joints centered over studs and staggered min 1 stud cavity on opposite sides of studs. Wallboard secured to studs with 1-1/4 in. long Type S-12 (or No. 6 by 1-1/4 in. long bugle head fine driller) steel screws spaced 8 in. OC at perimeter and 12 in. OC in the field.
NEW ENGLAND LEAD BURNING CO INC, DBA NELCO — Nelco

5F. **Gypsum Board* —** (As an alternate to Item 5) — For use with Items 1E and 2E and limited to 1 Hour Rating only, Gypsum panels with beveled, square or tapered edges, applied vertically, and fastened to the steel studs with 1 in. long Type S screws spaced 8 in. OC along vertical and bottom edges and 12 in. OC in the field. Vertical joints centered over studs and staggered one stud cavity on opposite sides of studs. Steel stud depth shall be a minimum 3-5/8 in.
THE SIAM GYPSUM INDUSTRY (SONGKHLA) CO — Type SCX

UNITED STATES GYPSUM CO — 5/8 in. thick Type SCX, SGX, ULIX

USG BORAL DRYWALL SFZ LLC — 5/8 in. thick Type SCX, SGX

5G. **Gypsum Board* —** (As an alternate to Item 5) — For use with Items 1E and 2E only, Gypsum panels with beveled, square or tapered edges, applied vertically or horizontally, as specified in the table below and fastened to the steel studs as described in Item 6. Vertical joints centered over studs and staggered one stud cavity on opposite sides of studs. Vertical joints in adjacent layers (multilayer systems) staggered one stud cavity. Horizontal joints need not be backed by steel framing. Horizontal edge joints and horizontal butt joints on opposite sides of studs need not be staggered. Horizontal edge joints and horizontal butt joints in adjacent layers (multilayer systems) staggered a min of 12 in. The thickness and number of layers for the 2 hr, 3 hr and 4 hr ratings are as follows:

Gypsum Board Protection on Each Side of Wall

Rating, Hr	Min Stud Depth, in. Item 2E	No. of Layers & Thickness of Panel	Min Thkns of Insulation (Item 4)
2	1-5/8	2 layers, 1/2 in. thick	Optional
2	1-5/8	2 layers, 5/8 in. thick	Optional
3	1-5/8	3 layers, 1/2 in. thick	Optional
3	1-5/8	3 layers, 5/8 in. thick	Optional
3	1-5/8	3 layers, 5/8 in. thick	Optional
4	1-5/8	4 layers, 5/8 in. thick	Optional
4	1-5/8	4 layers, 1/2 in. thick	Optional

CGC INC — 1/2 in. thick Type C, IP-X2 or IPC-AR;, 5/8 in. thick Type AR, C, IP-AR, IP-X1, IP-X2, IPC -AR, SCX, SHX, ULIX or 3/4 in. thick Types IP-X3 or ULTRACODE

THE SIAM GYPSUM INDUSTRY (SONGKHLA) CO — 1/2 in. thick Types C and 5/8 in. thick SCX

UNITED STATES GYPSUM CO — 1/2 in. thick Type C, IP-X2, IPC-AR or; 5/8 in. thick Type SCX, SGX, SHX, IP-X1, AR, C, , FRX-G, IP-AR, IP-X2, IPC -AR, ULIX; 3/4 in. thick Types IP-X3 or ULTRACODE

USG BORAL DRYWALL SFZ LLC — 1/2 in. Type C; 5/8 in. Types C, SCX, SGX, ULTRACODE

USG MEXICO S A DE C V — 1/2 in. thick Type C, IP-X2, IPC-AR or; 5/8 in. thick Type AR, C, IP-AR, IP-X1, IP-X2, IPC-AR, SCX, SHX, or; 3/4 in. thick Types IP-X3 or ULTRACODE

5H. **Gypsum Board* —** (Not Shown) — (As an alternate to Item 5 when used as the base layer on one or both sides of wall when 5/8 or 3/4 in thick products are specified. For direct attachment only to steel studs Item 2A, (not to be used with Item 3) - Nom 5/8 or 3/4 in. may be used as alternate to all 5/8 or 3/4 in. shown in Item 5, Wallboard

Protection on Each Side of Wall table. Nom 5/8 or 3/4 in. thick lead backed gypsum panels with beveled, square or tapered edges, applied vertically. Vertical joints centered over 20 MSG steel studs and staggered min 1 stud cavity on opposite sides of studs. Wallboard secured to studs with 1-1/4 in. long Type S-12 steel screws spaced 8 in. OC at perimeter and 12 in. OC in the field. For Joint Compound see Item 5. To be used with Lead Batten Strips (see Item 11A) or Lead Discs (see Item 12A).
MAYCO INDUSTRIES INC — Type X-Ray Shielded Gypsum

5I. **Gypsum Board* —** (As an alternate to Item 5) — Nom. 5/8 in. thick gypsum panels with beveled, square or tapered edges installed as described in Item 5. Steel stud minimum depth shall be as indicated in Item 5.
CGC INC — Type ULIX, ULX

UNITED STATES GYPSUM CO — Type ULIX, ULX

USG MEXICO S A DE C V — Type ULX

5J. **Gypsum Board* —** (Not Shown) — (As an alternate to Item 5 when used as the base layer on one or both sides of wall when 1/2 in. or 5/8 in thick products are specified, For direct attachment only to steel studs Item 2A, not to be used with Item 3). Nom 5/8 in. thick lead backed gypsum panels with beveled, square or tapered edges, applied vertically. Vertical joints centered over studs and staggered min 1 stud cavity on opposite sides of studs. Wallboard secured to studs with 1-1/4 in. long Type S-12 steel screws gypsum panel steel screws spaced 8 in. OC at perimeter and 12 in. OC in the field. Lead batten strips required behind vertical joints of lead backed gypsum wallboard and optional at remaining stud locations. Lead batten strips, min 2 in. wide, max 8 ft long with a max thickness of 0.14 in. placed on the face of studs and attached to the stud with construction adhesive and two 1 in. long Type S-12 pan head steel screws, one at the top of the strip and one at the bottom of the strip. Lead discs, nominal 3/8 in. diam by max 0.085 in. thick. Compression fitted or adhered over the screw heads. Lead batten strips and discs to have a purity of 99.9% meeting the Federal specification QQ-L-201f, Grade "C".
RADIATION PROTECTION PRODUCTS INC — Type RPP - Lead Lined Drywall

5K. **Gypsum Board* —** (As an alternate to Item 5 when Foam Plastic insulation (Item 4C) is used) — Any 5/8 in. thick, 4 ft. wide, Gypsum Board listed in Item 5 above. Applied vertically with vertical joints centered over studs and staggered one stud cavity on opposite sides of studs. Gypsum panels secured to studs with 1 in. long Type S steel screws spaced 8 in. OC at perimeter and in the field. For 2 layer assemblies outer layer will be attached to studs over inner layer with the 1-5/8 in. long steel screws spaced 8 in. OC.

6. **Fasteners —** (Not Shown) — For use with Items 2 and 2F - Type S or S-12 steel screws used to attach panels to studs (Item 2) or furring channels (Item 7). **Single layer systems:** 1 in. long for 1/2 and 5/8 in. thick panels or 1-1/4 in. long for 3/4 in. thick panels, spaced 8 in. OC when panels are applied horizontally, or 8 in. OC along vertical and bottom edges and 12 in. OC in the field when panels are applied vertically. **Single layer system with Type ULIX:** 1 in. long, spaced 12 in. OC in the field and perimeter, when panels are applied horizontally or vertically.**Two layer systems:** First layer- 1 in. long for 1/2 and 5/8 in. thick panels or 1-1/4 in. long for 3/4 in. thick panels, spaced 16 in. OC. Second layer- 1-5/8 in. long for 1/2 in., 5/8 in. thick panels or 2-1/4 in. long for 3/4 in. thick panels, spaced 16 in. OC with screws offset 8 in. from first layer.**Three-layer systems:** First layer- 1 in. long for 1/2 in., 5/8 in. thick panels, spaced 24 in. OC. Second layer- 1-5/8 in. long for 1/2 in., 5/8 in. thick panels, spaced 24 in. OC. Third layer- 2-1/4 in. long for 1/2 in., 5/8 in. thick panels or 2-5/8 in. long for 5/8 in. thick panels, spaced 12 in. OC. Screws offset min 6 in. from layer below. **Four-layer systems:** First layer- 1 in. long for 1/2 in., 5/8 in. thick panels, spaced 24 in. OC. Second layer- 1-5/8 in. long for 1/2 in., 5/8 in. thick panels, spaced 24 in. OC. Third layer- 2-1/4 in. long for 1/2 in. thick panels or 2-5/8 in. long for 5/8 in. thick panels, spaced 24 in. OC. Fourth layer- 2-5/8 in. long for 1/2 in. thick panels or 3 in. long for 5/8 in. thick panels, spaced 12 in. OC. Screws offset min 6 in. from layer below.

7. **Furring Channels —** (Optional, Not Shown, for single or double layer systems) — Resilient furring channels fabricated from min 25 MSG corrosion-protected steel, spaced vertically a max of 24 in. OC. Flange portion attached to each intersecting stud with 1/2 in. long Type S-12 steel screws. Not for use with Item 5A.

7A. **Framing Members* —** (Optional on one or both sides, not shown, for single or double layer systems) — As an alternate to Item 7, furring channels and Steel Framing Members as described below:
a. **Furring Channels —** Formed of No. 25 MSG galv steel. 2-9/16 in. or 2-23/32 in. wide by 7/8 in. deep, spaced max. 24 in. OC perpendicular to studs. Channels secured to studs as described in Item b. Gypsum board attached to furring channels as described in Item 6. Not for use with Item 5A.

b. **Steel Framing Members* —** Used to attach furring channels (Item 7Aa) to studs (Item 2). Clips spaced max. 48 in. OC. RSIC-1 and RSIC-1 (2.75) clips secured to studs with No. 8 x 1-1/2 in. minimum self-drilling, S-12 steel screw through the center grommet. RSIC-V and RSIC-V (2.75) clips secured to studs with No. 8 x 9/16 in. minimum self-drilling, S-12 steel screw through the center hole. Furring channels are friction fitted into clips. RSIC-1 and RSIC-V clips for use with 2-9/16 in. wide furring channels. RSIC-1 (2.75) and RSIC-V (2.75) clips for use with 2-23/32 in. wide furring channels.
PAC INTERNATIONAL L L C — Types RSIC-1, RSIC-V, RSIC-1 (2.75), RSIC-V (2.75).

7B. **Framing Members* —** (Optional, Not Shown) — As an alternate to Item 7, for single or double layer systems, furring channels and Steel Framing Members on only one side of studs as described below:
a. **Furring Channels —** Formed of No. 25 MSG galv steel, spaced 24 in. OC perpendicular to studs. Channels secured to studs as described in Item b. Batts and Blankets placed in stud cavity as described in Item 5. Two layers of gypsum board attached to furring channels as described in Item 5. Not for use with Item 5A.

b. **Steel Framing Members* —** Used to attach furring channels (Item 7Ba) to one side of studs (Item 2) only. Clips spaced 48 in. OC., and secured to studs with two No. 8 x 2-1/2 in. coarse drywall screws, one through the hole at each end of the clip. Furring channels are friction fitted into clips.
KINETICS NOISE CONTROL INC — Type Isomax

7C. **Framing Members* —** (Not Shown) — (Optional on one or both sides, not shown, for single or double layer systems) — As an alternate to Item 7, furring channels and Steel Framing Members as described below:
a. **Furring Channels —** Formed of No. 25 MSG galv steel. 2-3/8 in. wide by 7/8 in. deep, spaced max. 24 in. OC perpendicular to studs. Channels secured to studs as described in Item b. Gypsum board attached to furring channels as described in Item 6. Not for use with Item 5A.

b. **Steel Framing Members* —** Used to attach furring channels (Item 7Ca) to studs (Item 2). Clips spaced max. 48 in. OC. GENIECLIPS secured to studs with No. 8 x 1-1/2 in. minimum self-drilling, S-12 steel screw through the center grommet. Furring channels are friction fitted into clips.
PLITEQ INC — Type GENIECLIP

7D. **Steel Framing Members* —** (Optional on one or both sides, not shown, for single or double layer systems) — Furring channels and Steel Framing Members as described below:
a. **Furring Channels —** Formed of No. 25 MSG galv steel. Spaced 24 in. OC perpendicular to studs. Channels secured to studs as described in Item b. Ends of adjoining channels overlapped 6 in. and tied together with double strand of No. 18 AWG galvanized steel wire.. Gypsum board attached to furring channels as described in Item 6. Not