2026, Jericho Design Group, LLC. These drawings are protected by the copyright laws of the United States. These drawings or any part thereof may not be used for any purpose or reproduced in any form or by any means without the written consent of Doug Shaw.

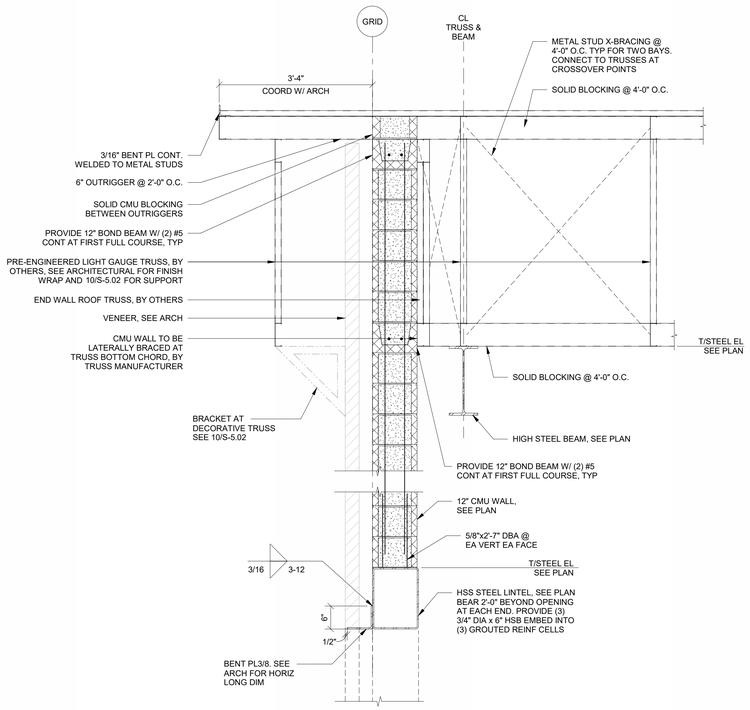

19 S-5.02 TYPICAL TRUSS BRACING SECTION AT OVERHANG
3/4" = 1'-0"

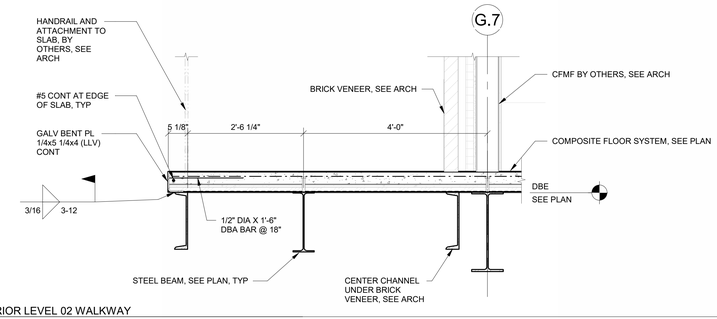

12 S-5.02 EOS AT EXTERIOR LEVEL 02 WALKWAY
3/4" = 1'-0"

BASE PLATE AND ANCHOR BOLT SCHEDULE										
BASE PLATE MARK	BASE PLATE					ANCHOR BOLTS			WELD	COMMENTS
	A	B	C	D1	D2	E	F	NO	W	
BP-1	3/4"	14"	14"	5 1/2"	5 1/2"	3/4"	9"	4	3/16	SEE 3/S-5.02
BP-2	1"	18"	18"	6 1/2"	6 1/2"	1 1/2"	12"	6	5/16	SEE 2/S-5.02
BP-3	1"	24"	24"	9 1/2"	9 1/2"	1 1/2"	12"	4	5/16	SEE 1/S-5.02
BP-4	1"	18"	18"	6 1/2"	6 1/2"	1 1/2"	12"	4	5/16	SEE 1/S-5.02 SIM

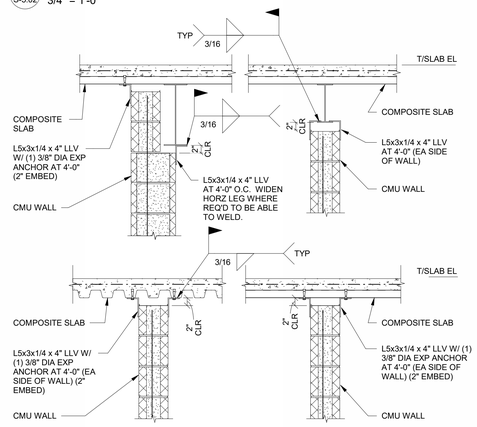

NOTES:
1. PROVIDE CMU WALL BRACING AT TOP OF WALL WHEN DISTANCE BETWEEN INTERSECTING WALLS AT BOTH ENDS EXCEED 22 TIMES THE WALL THICKNESS. LOCATION AND INSTALLATION OF BRACING FOR INTERIOR WALLS SHALL BE PER THE GOVERNING BUILDING CODE AND THE ARCHITECT'S DIRECTION. INTERSECTING WALLS MUST BE ANCHORED OR BONDED TOGETHER. WALLS WITH FREE ENDS OR WALLS WITH ONLY ONE INTERSECTING WALL PER LENGTH SHALL BE BRACED AT THE TOP.
2. ALIGN ANGLES OR PLATES WITH VERTICAL GROUTED CELLS UNLESS BOND BEAM IS PROVIDED.

11 S-5.02 TYPICAL BRACING AT INTERIOR CMU WALL AT COMPOSITE DECK
3/4" = 1'-0"

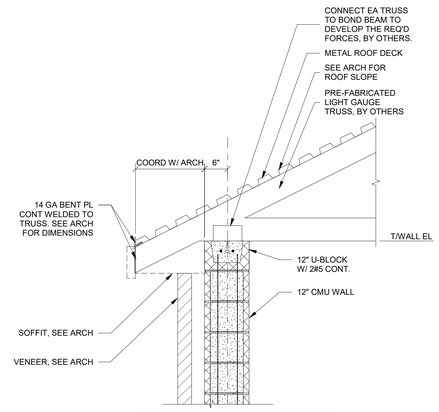

7 S-5.02 TYPICAL TRUSS BEARING AT CMU WALL
3/4" = 1'-0"

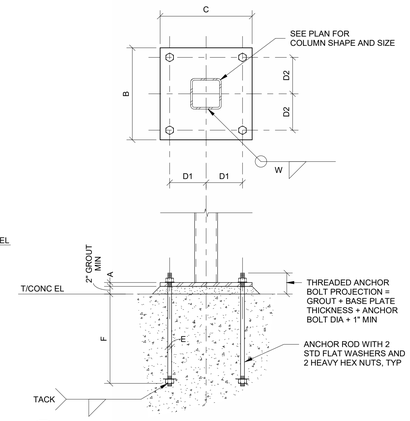

3 S-5.02 TYPICAL BASE PLATE AND ANCHOR BOLT (TUBE)
3/4" = 1'-0"

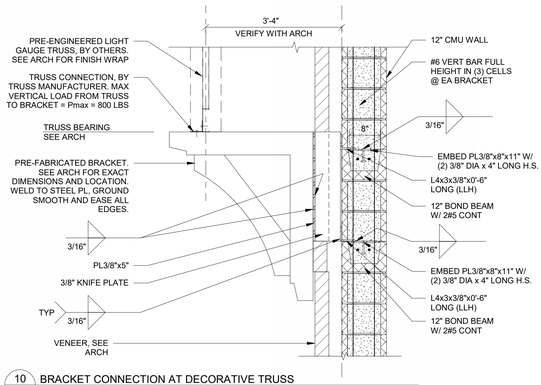

10 S-5.02 BRACKET CONNECTION AT DECORATIVE TRUSS
3/4" = 1'-0"

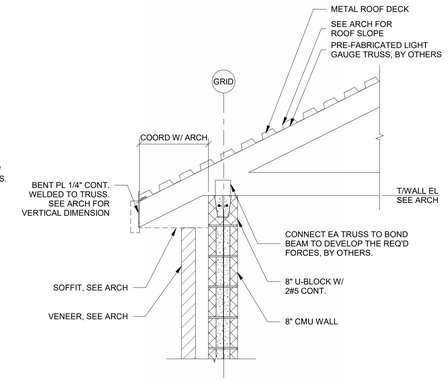

6 S-5.02 TYPICAL TRUSS BEARING AT CMU WALL
3/4" = 1'-0"

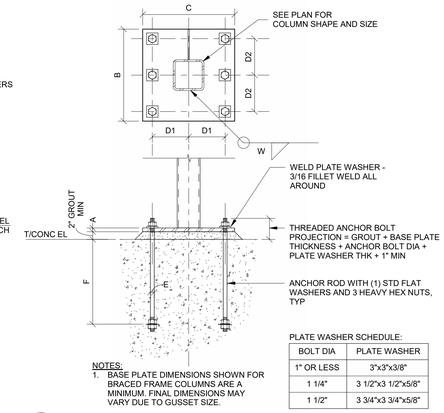

PLATE WASHER SCHEDULE:

BOLT DIA	PLATE WASHER
1" OR LESS	3"x3"x3/8"
1 1/4"	3 1/2"x3 1/2"x5/8"
1 1/2"	3 3/4"x3 3/4"x5/8"

NOTES:
1. BASE PLATE DIMENSIONS SHOWN FOR BRACED FRAME COLUMNS ARE A MINIMUM. FINAL DIMENSIONS MAY VARY DUE TO GUSSET SIZE.

2 S-5.02 TYPICAL BASE PLATE AND ANCHOR BOLT (BRACE FRAME)
3/4" = 1'-0"

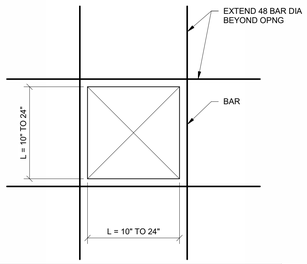

FLOOR OPENING REINFORCEMENT SCHEDULE	
L*	FORM OPENINGS TO EXCLUDE CONCRETE AND CUT DECK AFTER CONCRETE HAS ATTAINED ITS DESIGN STRENGTH
TO 10"	NO REINFORCING REQUIRED
10" TO 16"	2#5
16" TO 24"	2#6
OVER 24"	REQUIRES STRUCTURAL STEEL FRAME, SEE PLAN
L* IS MEASURED AT RIGHT ANGLE TO FLOOR DECK SPAN	

NOTE: DETAIL APPLIES FOR WHERE THERE ARE MULTIPLE PIPE PENETRATIONS SPACED CLOSER TOGETHER THAN 3xDIA OF THE PIPE. GC TO SUBMIT LOCATIONS FOR REVIEW

13 S-5.02 TYPICAL REINFORCING AT FLOOR OPENING (30 INCHES OR LESS)
3/4" = 1'-0"

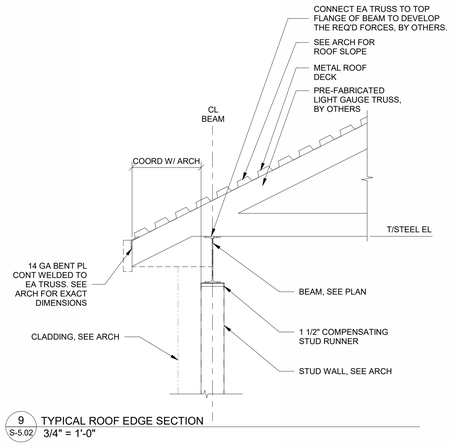

9 S-5.02 TYPICAL ROOF EDGE SECTION
3/4" = 1'-0"

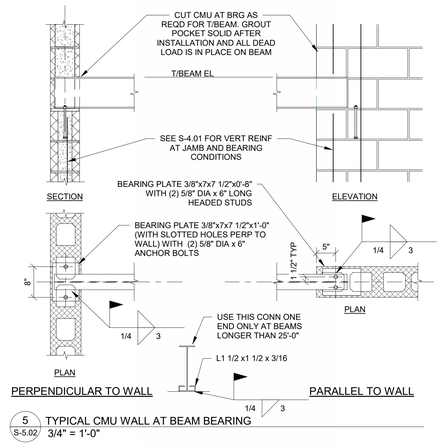

5 S-5.02 TYPICAL CMU WALL AT BEAM BEARING
3/4" = 1'-0"

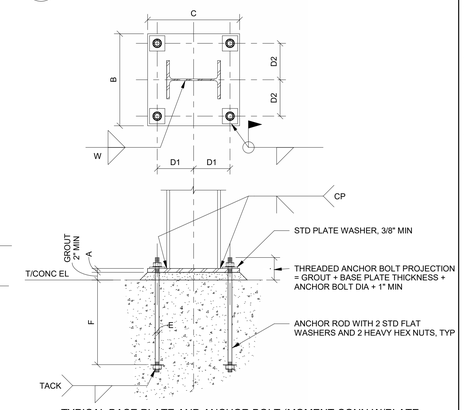

1 S-5.02 TYPICAL BASE PLATE AND ANCHOR BOLT (MOMENT CONN W/PLATE WASHERS)
3/4" = 1'-0"

JERICHO design group
208 Pirkle Ferry Road, Suite C
Cumming, GA 30040

GEORGIA REGISTERED No. 36000174 STRUCTURAL ENGINEER HOLLY C JETRICS

georgia civil CIVIL ENGINEERING LANDSCAPE ARCHITECTURE LAND SURVEYING

SHEAR STRUCTURAL

TOTAL ENGINEERS

Electrical Engineers

CITY OF COVINGTON ESTABLISHED 1822 FIRE RESCUE GEORGIA FIRE DEPARTMENT

FIRE STATION #23

City of Covington

HIGHWAY 36
COVINGTON, GA 30014

PRINT RECORD

No.	DATE	DESCRIPTION
	07/22/2026	ISSUED FOR PERMIT

Drawn By	Checked By
BS & SRC	HJ
Date	**Job No.**
07/02/2026	25033

Sheet Title
STEEL FRAMING DETAILS

Sheet No.
S-5.02

RELEASED FOR CONSTRUCTION

7/22/2026 4:15:49 AM