2026, Jericho Design Group, LLC. These drawings are protected by the copyright laws of the United States. These drawings or any part thereof may not be used for any purpose or reproduced in any form or by any means without the written consent of Doug Shaw.

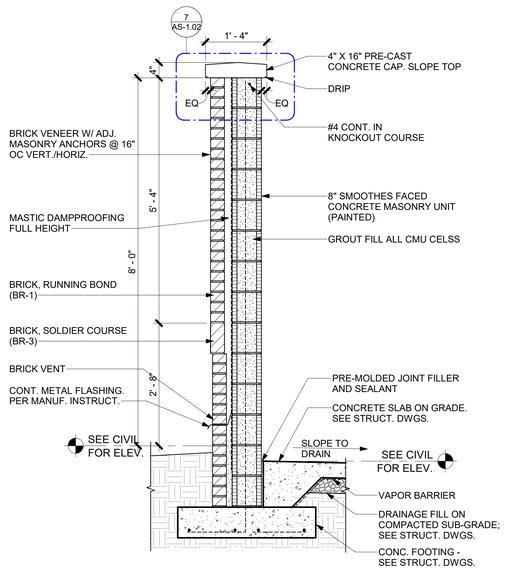

8 DUMPSTER SECTION
SCALE: 3/4" = 1'-0"

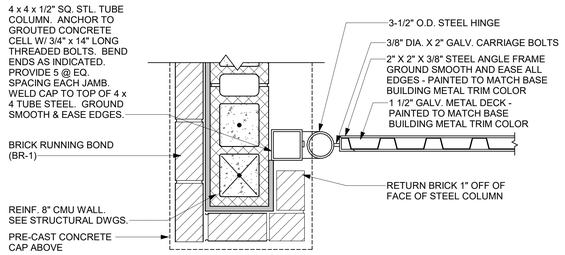

11 DUMPSTER GATE JAMB
SCALE: 1 1/2" = 1'-0"

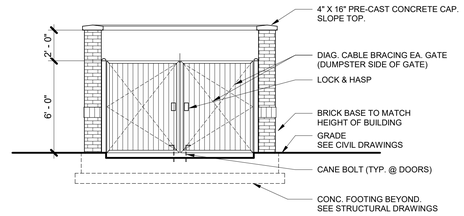

10 DUMPSTER GATE ELEVATION
SCALE: 1/4" = 1'-0"

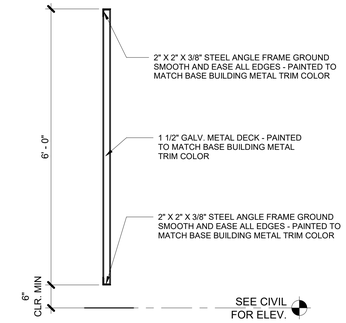

9 GATE SECTION DETAIL
SCALE: 3/4" = 1'-0"

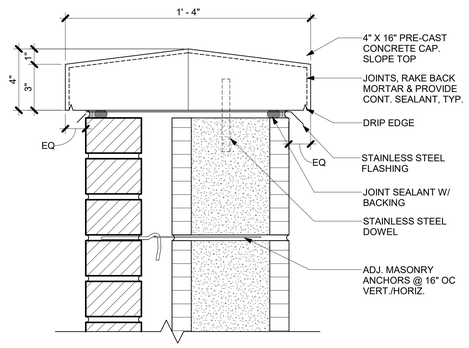

7 CAP DETAIL
SCALE: 3" = 1'-0"

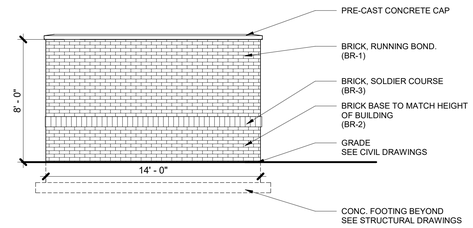

6 DUMPSTER ELEVATION
SCALE: 1/4" = 1'-0"

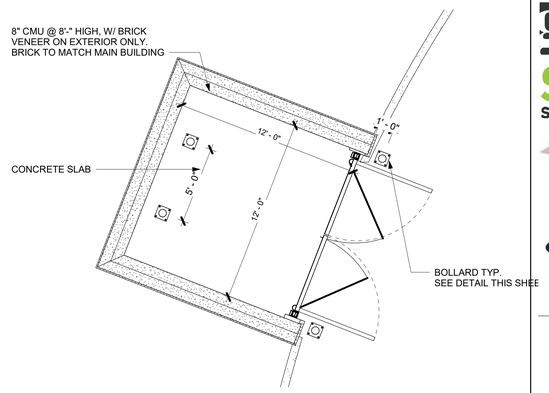

5 ENLARGED PLAN - DUMPSTER
SCALE: 1/4" = 1'-0"

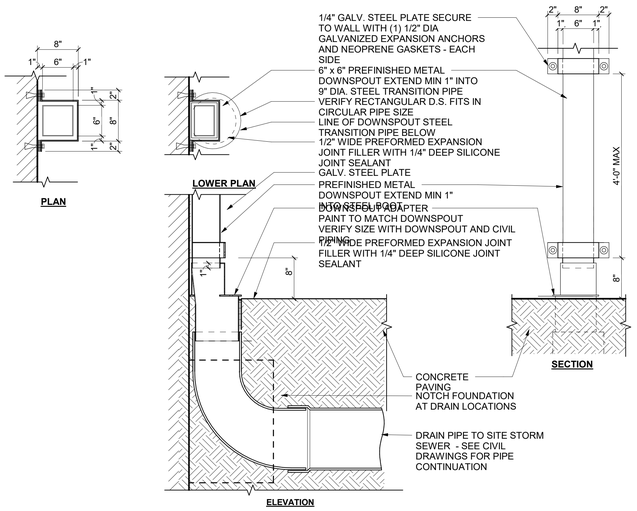

3 DOWNSPOUT BOOT DETAIL
SCALE: 1" = 1'-0"

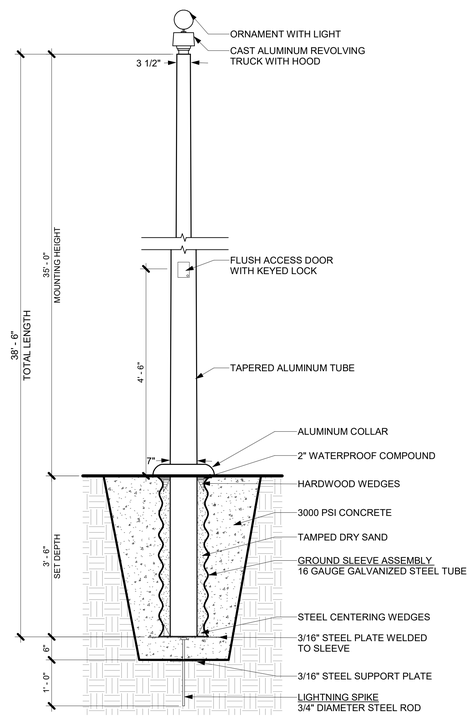

2 FLAG POLE DETAIL
SCALE: 3/4" = 1'-0"

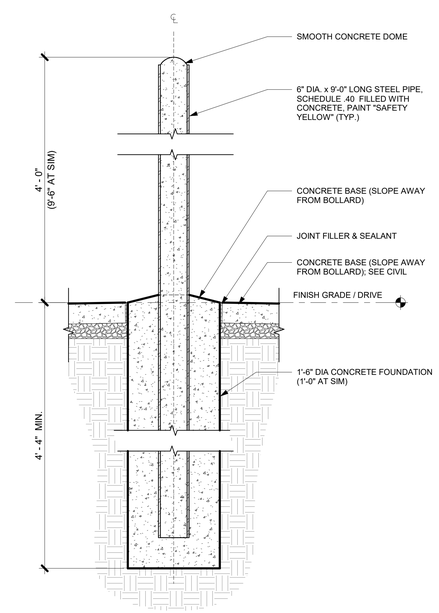

1 BOLLARD DETAIL
SCALE: 1" = 1'-0"

JERICHO design group
208 Pirkle Ferry Road, Suite C
Cumming, GA 30040

STATE OF GEORGIA
DOUGLAS E SHAW
07/22/2026
CERTIFICATE NO. RA014345
REGISTERED ARCHITECT

georgia civil
CIVIL ENGINEERING
LANDSCAPE ARCHITECTURE
LAND SURVEYING

SHEAR STRUCTURAL

TOTAL ENGINEERS

Electrical Engineers

CITY OF COVINGTON
ESTABLISHED 1822
FIRE RESCUE
INTERNATIONALLY ACCREDITED
2005
GEORGIA
FIRE DEPARTMENT

FIRE STATION #23

City of Covington

HIGHWAY 36
COVINGTON, GA 30014

PRINT RECORD

No.	DATE	DESCRIPTION
	07/22/2026	ISSUED FOR PERMIT

Drawn By	Checked By
ED	JDG
Date	**Job No.**
07/22/2026	25033

Sheet Title
ARCHITECTURAL SITE DETAILS

Sheet No.
AS-1.02

RELEASED FOR CONSTRUCTION

7/28/2026 4:21:17 PM