2026, Jericho Design Group, LLC. These drawings are protected by the copyright laws of the United States. These drawings or any part thereof may not be used for any purpose or reproduced in any form or by any means without the written consent of Doug Shaw.

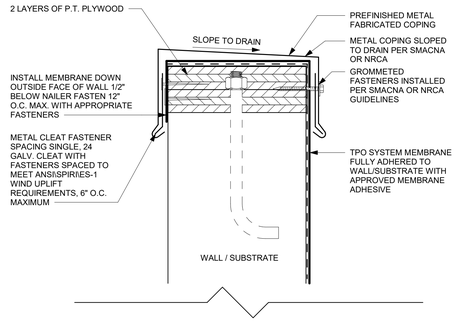

12 TYPICAL METAL COPING AT PARAPET
SCALE: 6" = 1'-0"

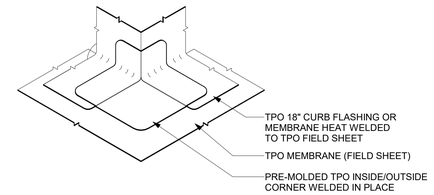

4 CURB FLASHING DETAIL - OUTSIDE CORNER
SCALE: 3" = 1'-0"

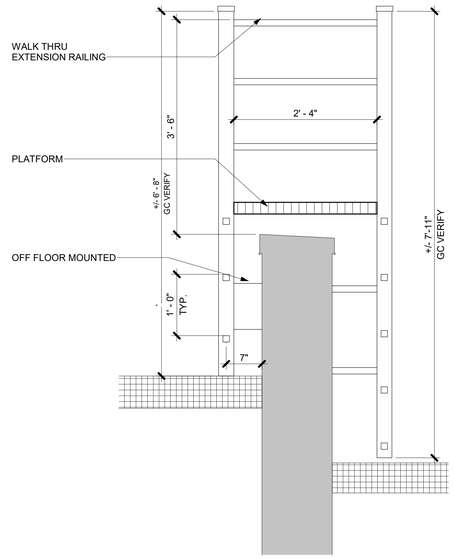

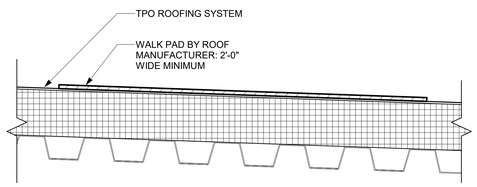

8 STD WALK PAD
SCALE: 3" = 1'-0"

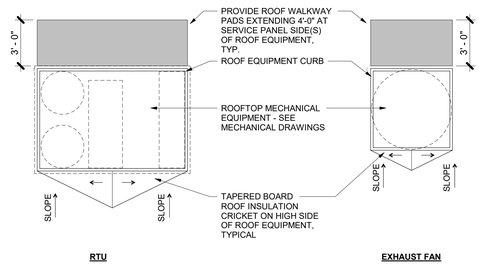

11 TYPICAL ROOF EQUIPMENT PLAN
SCALE: 1/4" = 1'-0"

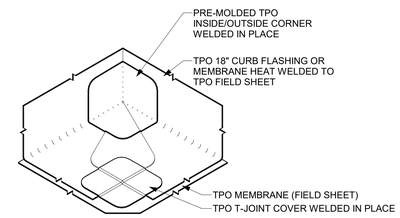

7 PARAPET LADDER DETAIL
SCALE: 1" = 1'-0"

3 CURB FLASHING DETAIL - INSIDE CORNER
SCALE: 3" = 1'-0"

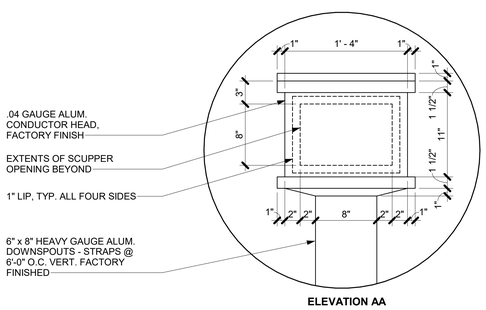

13 CONDUCTOR HEAD
SCALE: 1 1/2" = 1'-0"

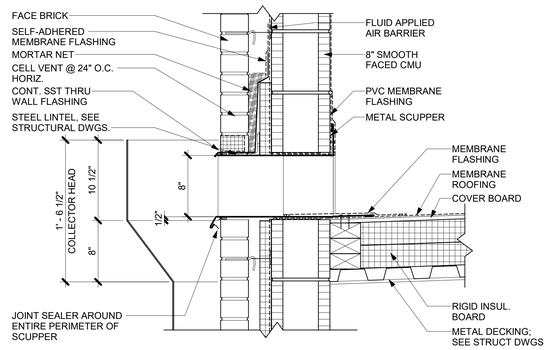

10 SCUPPER SECTION DETAIL
SCALE: 1 1/2" = 1'-0"

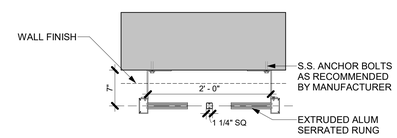

6 PARAPET LADDER DETAIL
SCALE: 1" = 1'-0"

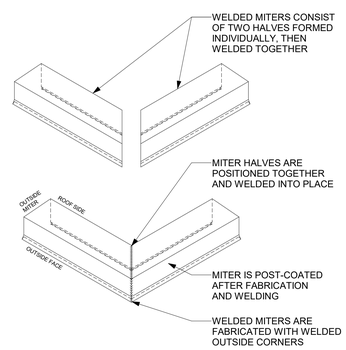

2 COPING CORNER DETAIL
SCALE: 3" = 1'-0"

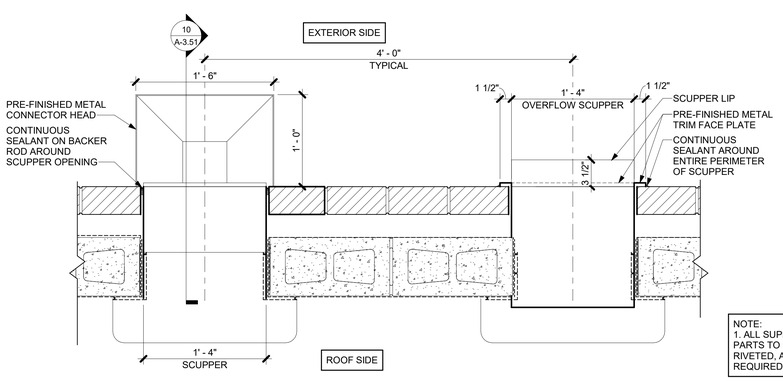

NOTE:
1. ALL SUPPER CONDUCTOR PARTS TO BE TABBED, RIVETED, AND CAULKED AS REQUIRED

9 SCUPPER PLAN DETAIL
SCALE: 1 1/2" = 1'-0"

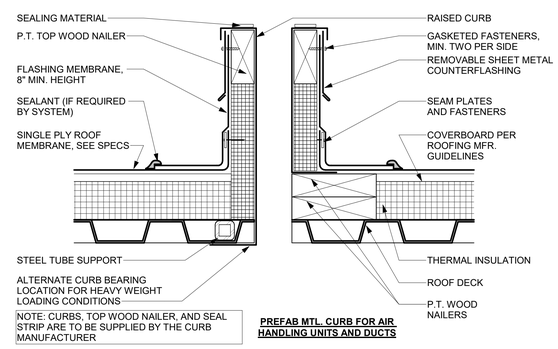

NOTE: CURBS, TOP WOOD NAILER, AND SEAL STRIP ARE TO BE SUPPLIED BY THE CURB MANUFACTURER

PREFAB MTL. CURB FOR AIR HANDLING UNITS AND DUCTS

5 PREFAB METAL CURB DETAIL
SCALE: 3" = 1'-0"

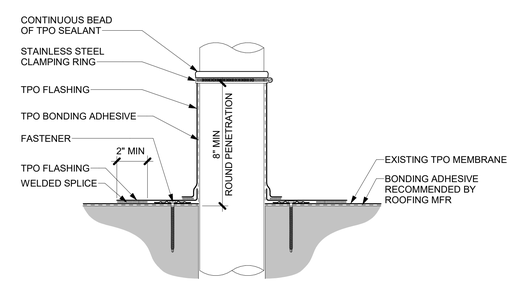

1 EXISTING ROOF PENETRATION DETAIL
SCALE: 3" = 1'-0"

JERICHO design group
208 Pirkle Ferry Road, Suite C
Cumming, GA 30040

STATE OF GEORGIA — DOUGLAS E SHAW — 07/22/2026 — CERTIFICATE NO. RA014145 — REGISTERED ARCHITECT

georgia civil — CIVIL ENGINEERING, LANDSCAPE ARCHITECTURE, LAND SURVEYING
SHEAR STRUCTURAL
TOTAL ENGINEERS
Electrical Engineers

CITY OF COVINGTON — ESTABLISHED 1822 — PROFESSIONALLY ADMINISTERED — FIRE RESCUE — GEORGIA — 2005 — FIRE DEPARTMENT

FIRE STATION #23

City of Covington

HIGHWAY 36
COVINGTON, GA 30014

PRINT RECORD

No.	DATE	DESCRIPTION
	07/22/2026	ISSUED FOR PERMIT

Drawn By	Checked By
ED	JDG
Date	**Job No.**
07/22/2026	25033

Sheet Title
ROOF DETAILS

Sheet No.
A-3.51

RELEASED FOR CONSTRUCTION

7/28/2026 4:21:45 PM