2026, Jericho Design Group, LLC. These drawings are protected by the copyright laws of the United States. These drawings or any part thereof may not be used for any purpose or reproduced in any form or by any means without the written consent of Doug Shaw.

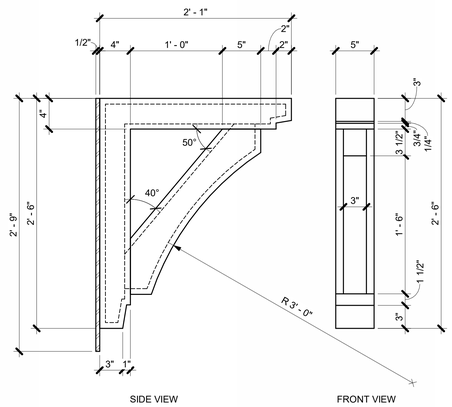

BRACKET A @ APPARATUS GABLE ONLY

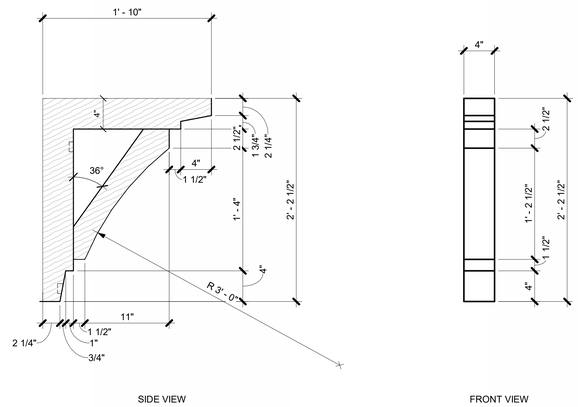

BRACKET B @ ALL OTHER LOCATIONS

6 DECORATIVE BRACKETS

SCALE: 1 1/2" = 1'-0"

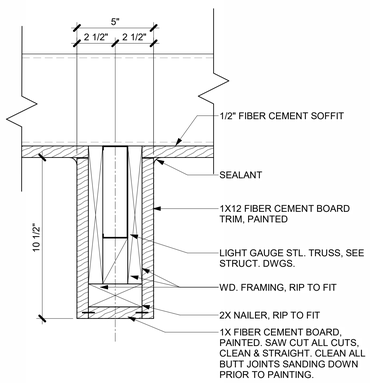

5 DETAIL - TOP CHORD

SCALE: 3" = 1'-0"

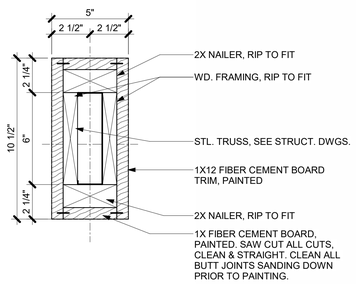

4 DETAIL @ VERTICAL

SCALE: 3" = 1'-0"

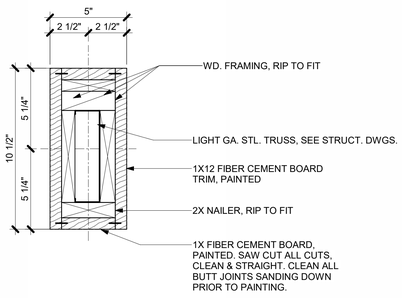

3 DETAIL - BOTTOM CHORD

SCALE: 3" = 1'-0"

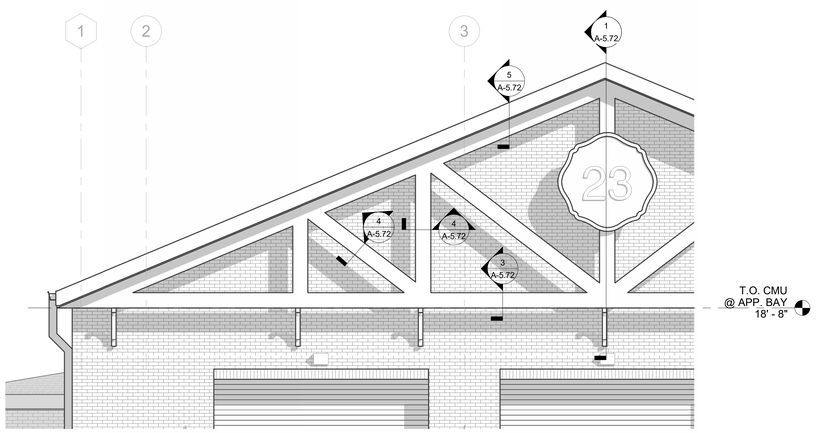

2 TRUSS ELEVATION

SCALE: 1/4" = 1'-0"

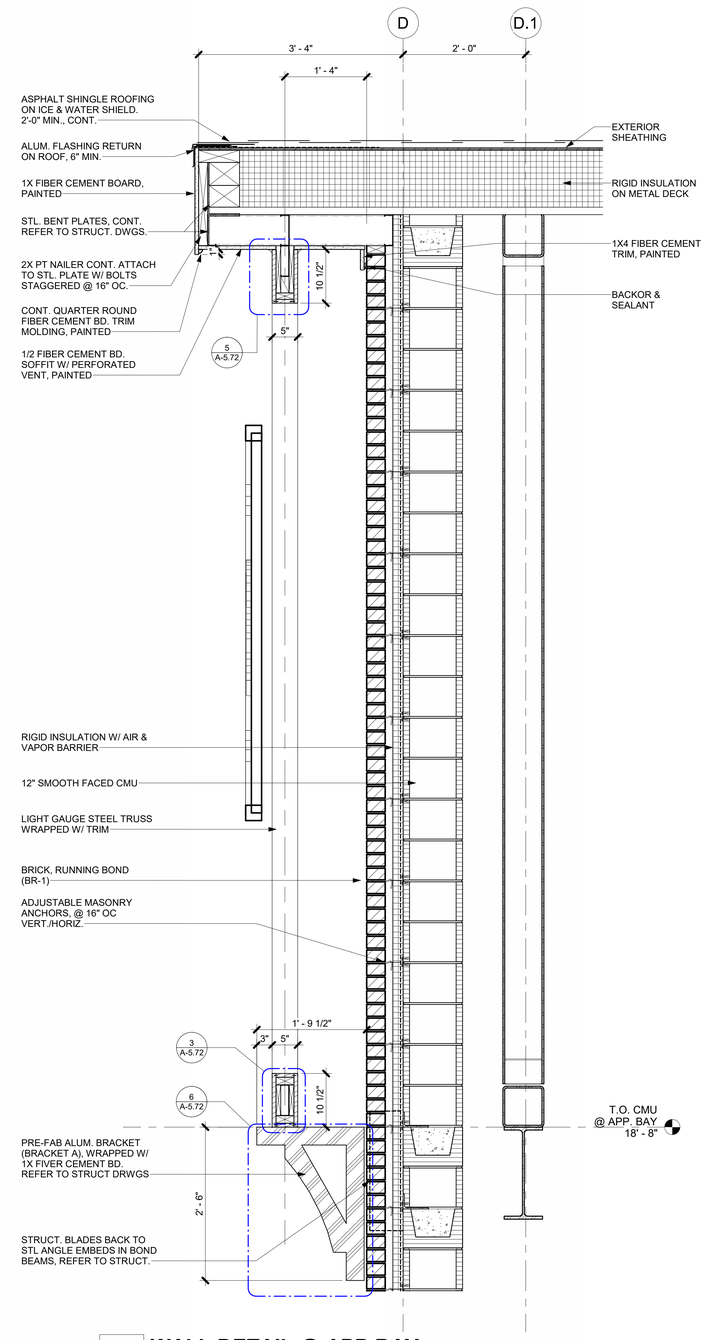

1 WALL DETAIL @ APP BAY

SCALE: 1" = 1'-0"

JERICHO design group
208 Pirkle Ferry Road, Suite C
Cumming, GA 30040

STATE OF GEORGIA
DOUGLAS E SHAW
07/22/2026
CERTIFICATE NO. RA014745
REGISTERED ARCHITECT

georgia civil
CIVIL ENGINEERING
LANDSCAPE ARCHITECTURE
LAND SURVEYING

SHEAR STRUCTURAL

TOTAL ENGINEERS

Electrical Engineers

CITY OF COVINGTON
ESTABLISHED 1822
INTERNATIONALLY ACCREDITED
FIRE RESCUE
2005
GEORGIA
FIRE DEPARTMENT

FIRE STATION #23

City of Covington

HIGHWAY 36
COVINGTON, GA 30014

PRINT RECORD

No.	DATE	DESCRIPTION
	07/22/2026	ISSUED FOR PERMIT

Drawn By ED
Checked By JDG
Date 07/22/2026
Job No. 25033

Sheet Title
SECTION DETAILS

Sheet No.
A-5.72

RELEASED FOR CONSTRUCTION

7/28/2026 4:22:16 PM