2026, Jericho Design Group, LLC. These drawings are protected by the copyright laws of the United States. These drawings or any part thereof may not be used for any purpose or reproduced in any form or by any means without the written consent of Doug Shaw.

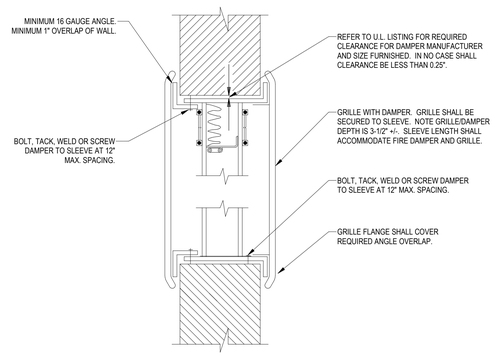

1 M0.5 TRANSFER GRILLE WITH FIRE DAMPER DETAIL
NO SCALE

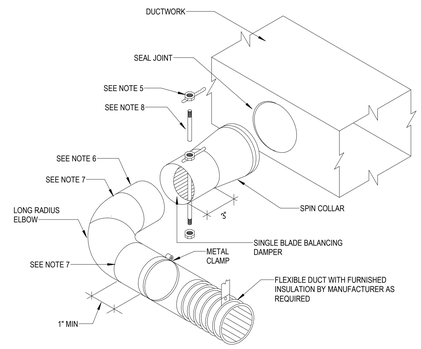

NOTES:

1. SUPPORT DUCTWORK AS REQUIRED.
2. BAND FLEX TO COLLAR 1/2" MINIMUM FROM OUTBOARD END OF COLLAR.
3. INSTALL SPIN COLLAR DAMPER IN OPEN POSITION; FINAL ADJUSTMENT BY TAB CONTRACTOR.
4. PULL FLEXIBLE DUCT INSULATION UP TO END OF SPIN COLLAR AT EDGE OF RECTANGULAR DUCTWORK. SEAL VAPOR BARRIER WITH GREY TAPE TO PREVENT MOISTURE MIGRATION.
5. PROVIDE EXTENSION RODS TO ACCOMMODATE INSULATION. PULL TO EDGE OF DUCTWORK AS REQUIRED AND SEAL TO EFFECT VAPOR BARRIER.
6. POP RIVET OR SHEET METAL SCREWS, MINIMUM 3 EACH AT 120 INTERVALS, CONNECTING STOVEPIPE TO COLLAR. ENSURE RIVETS OR SCREWS DO NOT INTERFERE WITH DAMPER.
7. TAPE AND SEAL ALL JOINTS TO PREVENT LEAKAGE.
8. INSTALL LOCKING QUADRANT AND HANDLE ON BOTTOM OF DUCT FOR EASY SERVICE (SHOWN ON TOP FOR EASE OF ILLUSTRATION ONLY).

2 M0.5 SPIN COLLAR FLEXIBLE DUCT CONNECTOR WITH DAMPER AND WITH LONG RADIUS ELBOW - LOW PRESSURE
NOT TO SCALE

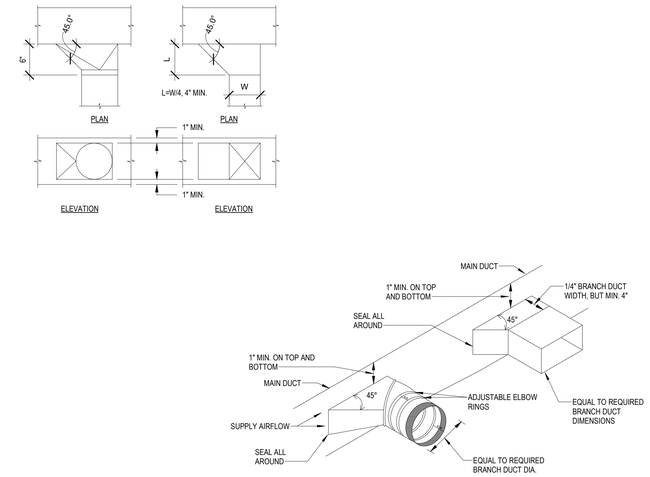

3 M0.5 TYPICAL BRANCH TAKEOFF FITTING DETAIL
NOT TO SCALE

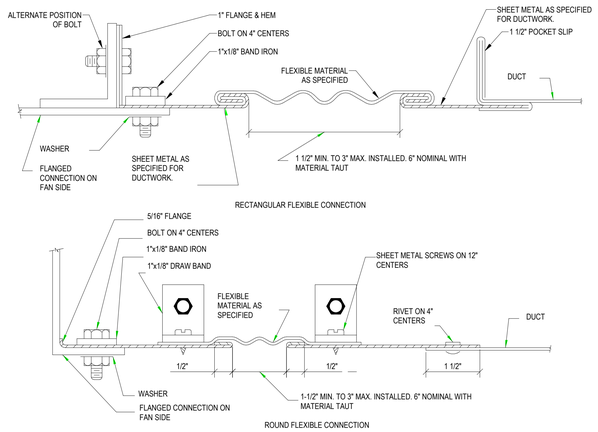

4 M0.5 EQUIPMENT FLEXIBLE CONNECTION RECTANGULAR/ROUND
NOT TO SCALE

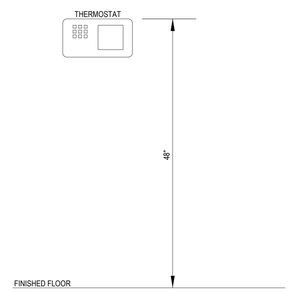

5 M0.5 T-STAT DETAIL
NOT TO SCALE

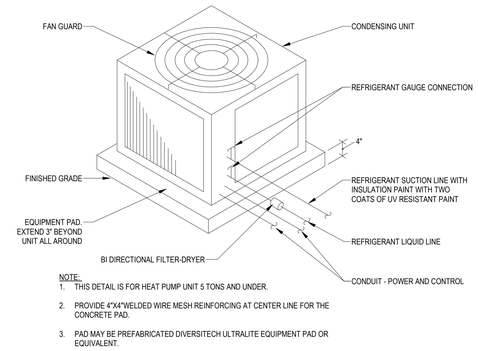

NOTE:
1. THIS DETAIL IS FOR HEAT PUMP UNIT 5 TONS AND UNDER.
2. PROVIDE 4"X4"WELDED WIRE MESH REINFORCING AT CENTER LINE FOR THE CONCRETE PAD.
3. PAD MAY BE PREFABRICATED DIVERSITECH ULTRALITE EQUIPMENT PAD OR EQUIVALENT.

6 M0.5 AIR COOLED CONDENSING UNIT SLAB MOUNTED
NOT TO SCALE

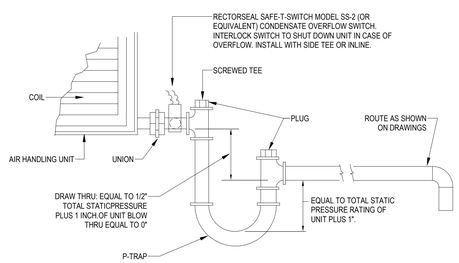

NOTE: DRAIN LINES SHALL BE ROUTED SEPARATE FROM REFRIGERANT LINE SETS.

7 M0.5 CONDENSATE DRAIN DETAIL
NOT TO SCALE

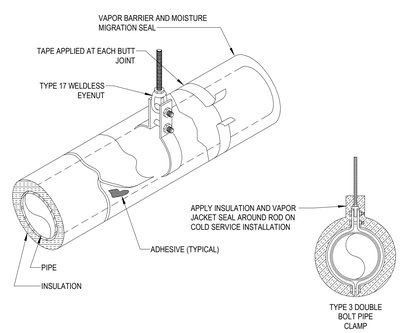

8 M0.5 PIPE HANGER, INSULATION AND VAPOR JACKET
NOT TO SCALE

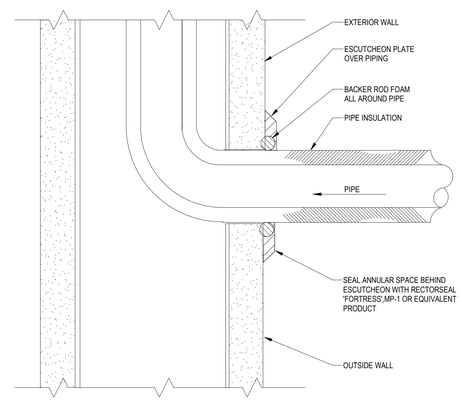

9 M0.5 REFRIGERANT PIPE SLEEVE THROUGH WALL DETAIL
NOT TO SCALE

JERICHO design group
208 Pirkle Ferry Road, Suite C
Cumming, GA 30040

GEORGIA REGISTERED No. PE036664 PROFESSIONAL ENGINEER KRUNAL M PATEL
7/28/2026

georgia civil CIVIL ENGINEERING LANDSCAPE ARCHITECTURE LAND SURVEYING

SHEAR STRUCTURAL

TOTAL ENGINEERS

Electrical Engineers

CITY OF COVINGTON ESTABLISHED 1822 INTERNATIONALLY ACCREDITED FIRE RESCUE 2005 GEORGIA FIRE DEPARTMENT

FIRE STATION #23

City of Covington

HIGHWAY 36
COVINGTON, GA 30014

PRINT RECORD

No.	DATE	DESCRIPTION
	07/22/2026	ISSUED FOR PERMIT

Drawn By	Checked By
JSW	JMK
Date	**Job No.**
07/22/2026	25-109

Sheet Title
MECHANICAL DETAILS

Sheet No.
M0.5

RELEASED FOR CONSTRUCTION

7/28/2026 4:52:59 PM