CSC.2024.01.007

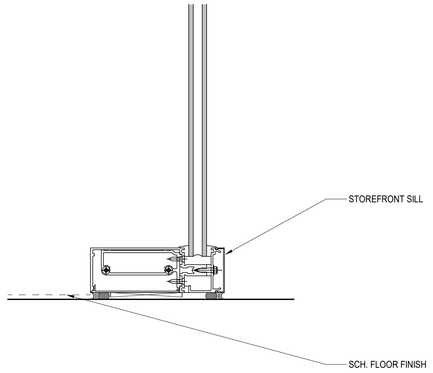

S2 TYP. SF SILL
A-825 | 3" = 1'-0"

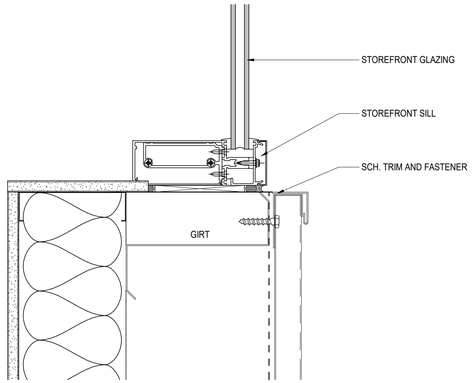

J8 SF SILL - METAL, VERT. MWP
A-825 | 3" = 1'-0"

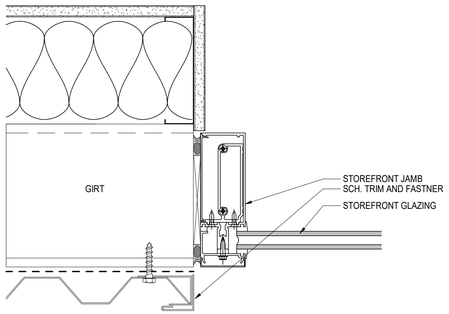

J7 SF JAMB - METAL, VERT. MWP
A-825 | 3" = 1'-0"

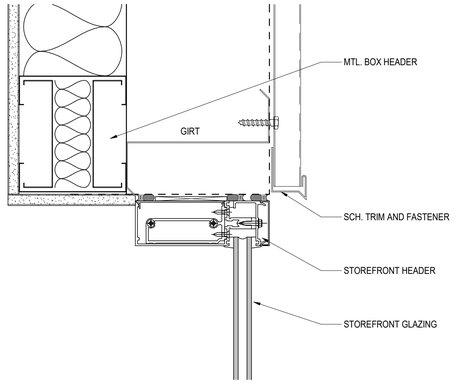

H7 SF HEAD - METAL, VERT. MWP
A-825 | 3" = 1'-0"

Y:\Projects\25-040 Drywall Warehouse_Oxford, GA\Arch\00 REVIT\Drywall Warehouse.rvt

4/27/2026 1:45:07 PM

CSC DESIGN, INC.
ARCHITECTS & ENGINEERS
135 P RICKMAN INDUSTRIAL DR.
SUITE 100 CANTON, GA 30115
Phone: (770) 345-2579

© 2025, CSC Design. These drawings are protected by the copyright laws of the United States. These drawings or any part thereof may not be used for any purpose or reproduced in any form or by any means without the written consent of CSC Design.

STATE OF GEORGIA
KEVIN B. WHIPPLE
04/27/2026
CERTIFICATE NO. RA014589
REGISTERED ARCHITECT

PROJECT NUMBER: 25-040

REVISIONS		
NO:	DATE:	ISSUE:

DRYWALL WAREHOUSE HWY 81

267 HIGHWAY 81
OXFORD, GA 30054
WALTON COUNTY, GEORGIA

STOREFRONT HEAD,JAMB & SILL DETAILS

A-825

ISSUED FOR CONSTRUCTION