PARTITION TYPES
A-802

FOR BLUEBEAM LABELINGOOCR:

0"
1"

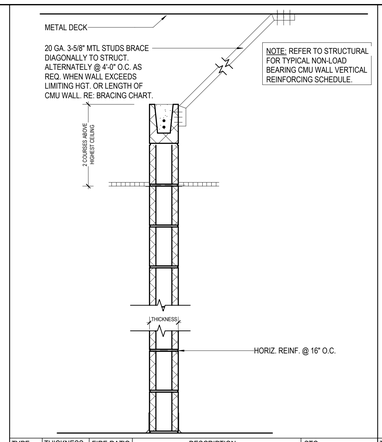

TYPE	THICKNESS	FIRE RAT'G	DESCRIPTION	STC
M6.C	6"	NONE	6" CMU ABOVE CEILING	42
M8.C	8"	NONE	8" CMU ABOVE CEILING	44
M10.C	10"	NONE	10" CMU ABOVE CEILING	46
M12.C	12"	NONE	12" CMU ABOVE CEILING	48

16 PARTITION TYPE M-.C [ABOVE CEILING]
1" = 1'-0"

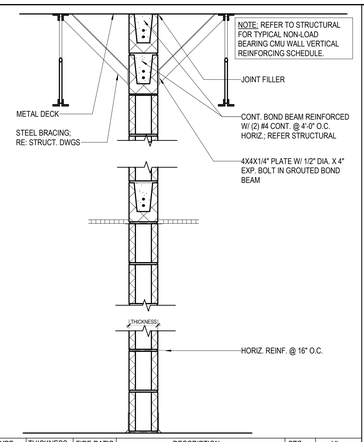

TYPE	THICKNESS	FIRE RAT'G	DESCRIPTION	STC	UL
M6	6"	NONE	6" CMU TO DECK	42	
M6.1	6"	1HR	6" CMU TO DECK	42	UL-U906
M6.2	6"	2HR	6" CMU TO DECK	42	UL-U906
M8	8"	NONE	8" CMU TO DECK	44	
M8.1	8"	1HR	8" CMU TO DECK	44	
M8.2	8"	2HR	8" CMU TO DECK	44	
M10	10"	NONE	10" CMU TO DECK	46	
M10.1	10"	1HR	10" CMU TO DECK	46	
M10.2	10"	2HR	10" CMU TO DECK	46	
M12	12"	NONE	12" CMU TO DECK	48	
M12.1	12"	1HR	12" CMU TO DECK	48	
M12.2	12"	2HR	12" CMU TO DECK	48	

15 PARTITION TYPE M- [TO DECK]
1" = 1'-0"

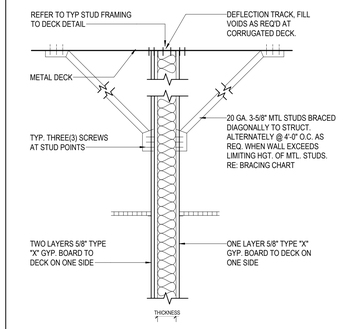

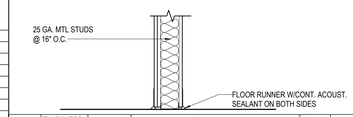

TYPE	THICKNESS	FIRE RAT'G	DESCRIPTION	STC	UL
C3.1	3-5/8"	1HR	3-5/8" METAL STUDS TO DECK	47	
C6.1	6"	1HR	6" METAL STUDS TO DECK	51	

14 PARTITION TYPE C-
1" = 1'-0"

BRACE FRAMING FOR 3-5/8" STUDS

STUD TYPE	STUD PROP.	SPACING	MAX. LENGTH	MISCELLANEOUS
SJ 20 (40 KSI) (20 GA.)	1X = 0.541 IN^4	4'-0" O.C.	14'-0"	BRACE AT MID-POINT FOR LENGTHS OVER 14'-0"
	rx = 1.429 IN			
	A = 0.2136 IN^2			
	Sx = 0.273 IN^3			

BRACE FRAMING FOR 6" STUDS

STUD TYPE	STUD PROP.	SPACING	MAX. LENGTH	MISCELLANEOUS
SJ 20 (40 KSI) (20 GA.)	1X = 1.787 IN^4	4'-0" O.C.	20'-0"	BRACE AT MID-POINT FOR LENGTHS OVER 20'-0"
	rx = 2.253 IN			
	A = 0.2148 IN^2			
	Sx = 0.539 IN^3			

LIMITING HEIGHT OF METAL STUDS

13 PARTITION TYPES-BRACING CHART
12" = 1'-0"

HOW TO USE THIS SHEET

1. NOT EVERY PARTITION TYPE SHOWN IS NECESSARILY INTENDED FOR USE ON THIS PROJECT, REFER TO FLOOR PLANS FOR REFERENCE MARKS INDICATING APPLICABLE PARTITION TYPES.
2. REFER TO BRACING DETAILS FOR SUPPORT OF THE TOP OF EACH PARTITION TYPE AND BRACING OF PARTITIONS THAT EXCEED LIMITING HEIGHT OF PARTITION TYPES.
3. REFER TO FINISH SCHEDULES FOR APPLIED FINISHES TO BOTH SIDES OF WALLS.
4. COORDINATE TOPS OF FINISHED WALLS WITH ADJACENT CEILING HEIGHTS PER SCHEDULES, SECTIONS AND OR DETAILS.
5. CONSULT ARCH. FOR ANY DISCREPANCIES OR QUESTIONS REGARDING PARTITIONS PRIOR TO INSTALLATION.

INTERIOR METAL STUD PARTITION NOTES

1. ALL METAL STUD PARTITIONS SHALL BE 25 GAUGE METAL STUDS AT 16" O.C. U.N.O., IF THE LIMITING HEIGHT FOR A 25 GAUGE METAL STUD PARTITION IS EXCEEDED, INCREASE GAUGE OF STUDS. NOTIFY ARCH. PRIOR TO INSTALLATION.
2. PROVIDE 20 GAUGE METAL STUDS, IN LIEU OF 25 GAUGE METAL STUDS, AT STUD WALL WITH TILE FINISHES.
3. METAL STUD PARTITION BRACING
   A. WHERE BRACING METHODS BETWEEN THIS SHEET AND STRUCT. CONFLICT, STRUCT. SHALL OVERRIDE, NOTIFY ARCH. PRIOR TO INSTALLATION
   B. PROVIDE INTERMEDIATE BRACING AT ALL METAL STUD PARTITIONS THAT EXCEED THE VERTICAL LIMIT HEIGHT OF METAL STUDS
   C. ALL BRACING SHALL BE AT STUD POINTS
4. SET ALL FLOOR TRACKS ON A CONTINUOUS RIBBON OF SEALANT.
5. USE CONT. DEEP LEG DEFLECTION TRACK AT TOP OF ALL PARTITION CONNECTIONS AT TOP-OF-DECK LOCATIONS, REFER TO "TYP STUD FRAMING TO DECK" DETAIL.
6. RIGIDLY BRACE ALL DOOR FRAMES AT THE HEAD, HINGE, AND STRIKE SIDES, RIGIDLY BRACE ALL WINDOW FRAMES AT THE HEAD, JAMBS, AND SILL.
7. LOCATE CONTROL JOINTS IN GYPSUM BOARD PARTITIONS AS FOLLOWS
   A. PARTITIONS OR FURRING EXCEEDING 30'-0" SPANS HORIZ. AND OR VERT.
   B. WHERE A PARTITION ABUTS A STRUCTURAL ELEMENT OR DISSIMILAR WALL
   C. AT CHANGES WITHIN PLANE OF PARTITION
   D. AT EXPANSION JOINTS
   E. AT BOTH JAMBS OF INTERIOR AND EXTERIOR DOOR FRAMES AND WINDOW FRAMES, ABOVE AND BELOW FOR FULL HEIGHT OF WALL
8. FIRE-RATED PARTITIONS
   A. REFER TO THE UL FIRE RESISTANCE DIRECTORY FOR DETAILED DESCRIPTIONS OF FIRE-RATED PARTITIONS (IF NO UL DESIGN INDICATED, RATING IS ACHIEVED BY EQUIVALENT THICKNESS PER IBC)
   B. PROVIDE TYPE "X" FIRE RESISTIVE GYPSUM BOARD, 5/8" THICK U.N.O.
   C. FILL ALL GAPS AND DECK VOIDS WITH CONT. FIRESAFING INSUL.
   D. SEAL BOTTOM OF PARTITION ON BOTH SIDES, PARTITION PERIMETER, AND ALL PENETRATIONS WITH CONT. FIRE-RATED SEALANT
9. PARTITIONS WITH SOUND ATTENUATION BATT INSUL. BLANKETS
   A. PROVIDE FULL THICK SOUND ATTENUATION BATT INSUL. BLANKETS FULL HEIGHT OF PARTITION U.N.O.
   B. FILL ALL GAPS AND DECK VOIDS WITH CONT. SOUND ATTENUATION SAFING INSUL.
   C. TAPE AND BED OR CAULK ALL JOINTS BETWEEN GYPSUM BOARD PANELS
   D. SEAL BOTTOM OF PARTITION ON BOTH SIDES, PARTITION PERIMETER, AND ALL PENETRATIONS WITH CONT. ACOUSTICAL SEALANT (USE SEALANT INDICATED IN ITEM ABOVE, IN LIEU OF ACOUSTICAL SEALANT, AT PARTITIONS DESIGNATED AS FIRE-RATED PARTITIONS)

INTERIOR CMU PARTITION NOTES

1. CMU PARTITION BRACING
   A. WHERE BRACING METHODS BETWEEN THIS SHEET AND STRUCT. CONFLICT, STRUCT. SHALL OVERRIDE, NOTIFY ARCH. PRIOR TO INSTALLATION.
   B. PROVIDE INTERMEDIATE BRACING AT ALL CMU PARTITIONS AT CONDITIONS AS INDICATED ON THE "PARTITION TYPES-TYP CMU WALL BRACING" DETAIL.
2. REFER TO WALL SECTIONS FOR THE USE OF STARTER COURSES AT THE BASE OF INTERIOR PARTITIONS.
3. PROVIDE CMU LINTELS FOR ALL OPENINGS IN INTERIOR CMU PARTITIONS, COORD. WITH STRUCT. DOCUMENTS.
4. PROVIDE 3/4" SPACE BETWEEN TOP OF CMU PARTITION AND STRUCTURE AND OR DECK ABOVE FOR POTENTIAL DEFLECTION, SEAL AS INDICATED ON PARTITION TYPE, OR AS INDICATED IN THESE NOTES.
5. REFER TO STRUCT. DOCUMENTS FOR ALL REINFORCING, BOND BEAM LOCATIONS, AND LINTEL SCHEDULES.
6. LOCATE CONTROL JOINTS IN CMU PARTITIONS AS FOLLOWS, U.N.O. BY STRUCT.
   A. PARTITIONS EXCEEDING 25'-0" IN PLAN LENGTH
   B. WHERE PARTITION ABUTS A STRUCTURAL ELEMENT OF DISSIMILAR WALL
   C. AT EXPANSION JOINTS
   D. REFER TO DETAILS FOR ADDITIONAL LOCATIONS
7. FIRE-RATED PARTITIONS
   A. REFER TO THE UL FIRE RESISTANCE DIRECTORY FOR DETAILED DESCRIPTIONS OF FIRE-RATED PARTITIONS
   B. FILL ALL GAPS AND DECK VOIDS WITH CONT. FIRESAFING INSUL.
   C. SEAL FIRE-RATED PARTITION PERIMETER AND ALL PENETRATIONS WITH CONT. FIRE-RATED SEALANT

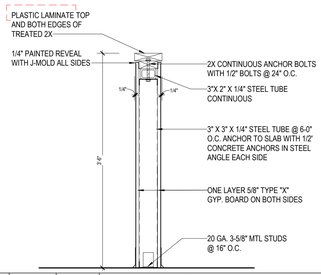

TYPE	THICKNESS	FIRE RAT'G	DESCRIPTION
S3.P	3 5/8"	NONE	3 5/8" METAL STUDS PARTIAL HEIGHT WITH CAP
S6.P	6"	NONE	6" METAL STUDS PARTIAL HEIGHT WITH CAP

12 PARTITION TYPE S-.P [PARTIAL WALL]
1" = 1'-0"

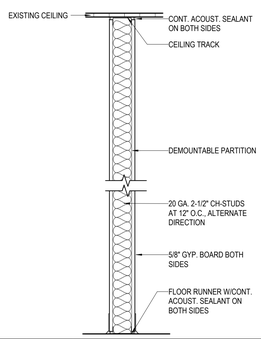

TYPE	THICKNESS	FIRE RAT'G	DESCRIPTION	STC
S3.R	3 5/8"	NONE	3 5/8" METAL STUDS UNDER THE CEILING	
S6.R	6"	NONE	6" METAL STUDS UNDER THE CEILING	

11 PARTITION TYPE - S- .R [TO CLG]
1" = 1'-0"

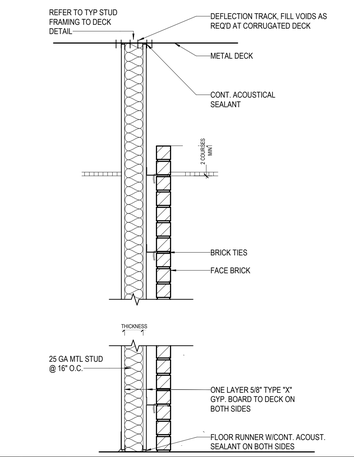

TYPE	THICKNESS	FIRE RAT'G	DESCRIPTION	STC	UL
S3.F	3 5/8"	NONE	3 5/8" METAL STUDS TO DECK		
S3.F1	3 5/8"	1HR	3 5/8" METAL STUDS TO DECK		
S6.F	6"	NONE	6" METAL STUDS TO DECK		
S6.F1	6"	1HR	6" METAL STUDS TO DECK		

10 PARTITION TYPE S-.F [W BRICK FINISH]
1" = 1'-0"

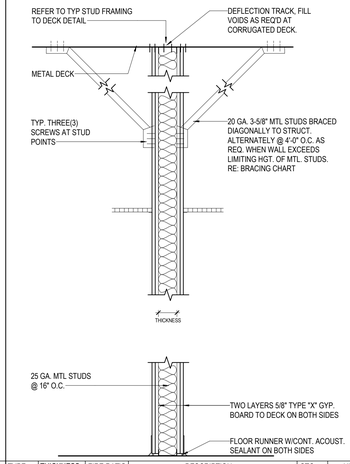

TYPE	THICKNESS	FIRE RAT'G	DESCRIPTION	STC	UL
S3.2	3 5/8"	2 HR	3 5/8" METAL STUDS TO DECK	53	
S6.2	6"	2 HR	6" METAL STUDS TO DECK	58	

09 PARTITION TYPE - S-.2 [TO DECK]
1" = 1'-0"

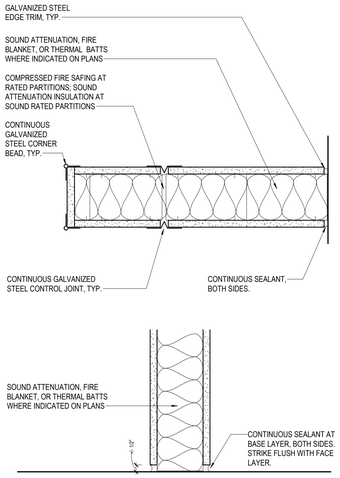

08 PARTITION TYPES-TYP DETAILS
12" = 1'-0"

THIS DETAIL IS INTENDED TO SHOW THE STUD FRAMING CONNECTION TO DECK CONDITION AND BRIDGING INFORMATION ONLY AND DOES NOT SHOW OTHER ADDITIONAL INFORMATION, REFER TO PARTITION TYPES AND CEILING DETAILS FOR ALL OTHER MATERIALS, COMPONENTS, AND ASSOCIATED INFORMATION

ATTACH ANY BOARD ON EITHER SIDE OF STUD NO CLOSER THAN 6" MIN TO TRACK, REFER TO PARTITION TYPES

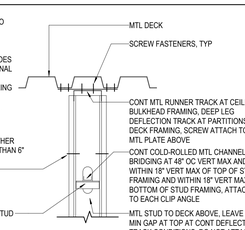

07 PARTITION TYPES-STUD FRAMING TO DECK
1 1/2" = 1'-0"

TYPE	THICKNESS	FIRE RAT'G	DESCRIPTION	STC
S3	3 5/8"	NONE	3 5/8" METAL STUDS TO DECK	49
S3.1	3 5/8"	1 HR	3 5/8" METAL STUDS TO DECK	49
S6	6"	NONE	6" METAL STUDS TO DECK	51
S6.1	6"	1 HR	6" METAL STUDS TO DECK	51

06 PARTITION TYPE - S [TO DECK]
1" = 1'-0"

TYPE	THICKNESS	FIRE RAT'G	DESCRIPTION	STC
S3.C	3 5/8"	NONE	3 5/8" METAL STUDS ABOVE CEILING	43
S3.CX	3 5/8"	NONE	3 5/8" METAL STUDS ABOVE CLG, NO INSULATION	38
S6.C	6"	NONE	6" METAL STUDS ABOVE CEILING	51
S6.CX	6"	NONE	6" METAL STUDS ABOVE CLG, NO INSULATION	46

05 PARTITION TYPE - S-.C [ABOVE CLG]
1" = 1'-0"

TYPE	THICKNESS	FIRE RAT'G	DESCRIPTION	STC
F2	1 7/8"	NONE	1 7/8" METAL STUDS TO DECK	N/A
F3	3 5/8"	NONE	3 5/8" METAL STUDS TO DECK	N/A
F6	6"	NONE	6" METAL STUDS TO DECK	N/A

04 PARTITION TYPE - F TO DECK]
1" = 1'-0"

TYPE	THICKNESS	FIRE RAT'G	DESCRIPTION	STC
F1.C	7/8"	NONE	7/8" HAT CHANNELS ABOVE CEILING	N/A
F2.C	2 1/2"	NONE	2 1/2" METAL STUDS ABOVE CEILING	N/A
F3.C	3 5/8"	NONE	3 5/8" METAL STUDS ABOVE CEILING	N/A
F6.C	6"	NONE	6" METAL STUDS ABOVE CEILING	N/A

03 PARTITION TYPE - F-.C [ABOVE CLG]
1" = 1'-0"

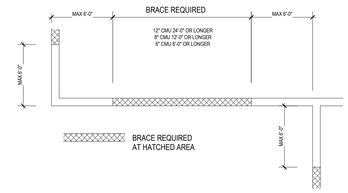

02 PARTITION TYPES-TYP CMU WALL BRACING
12" = 1'-0"

PARTITION SYMBOL LEGEND

- CMU BLOCK - REFER TO TABLE FOR THICKNESS
- CONT. BOND BEAM REINFORCED W/ (2) #4 CONT. UNO BY STRUCTURE - REFER TO TABLE FOR THICKNESS
- CONT. BOND BEAM BLOCK - REFER TO TABLE FOR THICKNESS
  REINFORCE W/ CONT. REBAR @ 9'-0" A.F.F.:
  - (2) #4 @ 6" CMU
  - (2) #5 @ 8" CMU
  UNO BY STRUCTURE
- SOUND ATTENUATION BLANKETS
- SCHEDULED CEILING

S3.C

PARTITION FIRE RATING

	FOR NO RATING	2	2HR
S	SMOKE	3	3HR
1	1HR	4	4HR

PARTITION MODIFIER:
- "NO DIGIT" FOR FULL HEIGHT ASSEMBLY TO DECK
C ABOVE CEILING
F WITH FINISH ON ONE SIDE
P PARTIAL HEIGHT
X NO SOUND ATTENUATION BLANKETS
G ANGLED CAP
R TO CEILING (FOR RENOVATION PROJECTS ONLY)
A SOUND PARTITION WITH FOAM INFILL
B BALLISTIC PARTITION WITH SAND INFILL

STRUCTURAL CORE WIDTH

METAL & CFMF:		CMU:		C-H:	
1	7/8" CHANNEL	4	3-5/8" ACTUAL, 4" NOM	2	2-1/2"
2	2-1/2" STUD	6	5-5/8" ACTUAL, 6" NOM	4	4"
3	3-5/8" STUD	8	7-5/8" ACTUAL, 8" NOM	6	6"
4	4" STUD	10	9-5/8" ACTUAL, 10" NOM		
5	5-1/2" STUD	12	11-5/8" ACTUAL, 12" NOM		
6	6" STUD				
8	8" STUD				
12	12" STUD				

PARTITION TYPE:
C - METAL STUD PARTITION WITH 2 GYP. BD. ONE SIDE & 1 GYP. BD. ON OTHER SIDE
D - METAL STUD DEMISING / SOUND PARTITION
F - METAL STUD FURRING PARTITION, SUBSTRATE & OR FINISH TO ONE SIDE
J - METAL STUD SHAFT PARTITION, C-H STUD WITH LINER BD
S - METAL STUD PARTITION

M - CONCRETE MASONRY UNITS (CMU)
K - CONCRETE MASONRY UNITS (CMU) WITH METAL STUDS ABOVE CEILING
A - DOUBLE WYTHE CONCRETE MASONRY UNITS (CMU), SOUND PARTITION
E - DOUBLE WYTHE CONCRETE MASONRY UNITS (CMU) WITH METAL STUDS ABOVE CEILING, SOUND PARTITION
B - DOUBLE WYTHE CONCRETE MASONRY UNITS (CMU), BUILDING SEPARATION WALL

01 PARTITION TAG LEGEND
1/8" = 1'-0"

PBK
www.pbk.com
770-227-5473
GRIFFIN, GA

HCS - SRO Offices - Warhawk Fieldhouse Modifications
47 LEMON STREET MCDONOUGH, GA 30253

FINAL DOCUMENTS

HENRY COUNTY SCHOOLS

NORTH

STATE OF GEORGIA
BRETT R. McNIER
CERTIFICATE NO. 9020
REGISTERED ARCHITECT

Architectural Registration No. 9020

CLIENT
HENRY COUNTY SCHOOLS

DATE	PROJECT NUMBER
06 / 18 / 2026	250306

DRAWING HISTORY

No.	Description	Date

CHECKED BY: RV
DRAWN BY: KM

PARTITION TYPES

A-802

Plot Stamp:
6/16/2026 3:50:44 PM