MECHANICAL DETAILS
M-502
FOR BLUEBEAM LABELING/OCR:

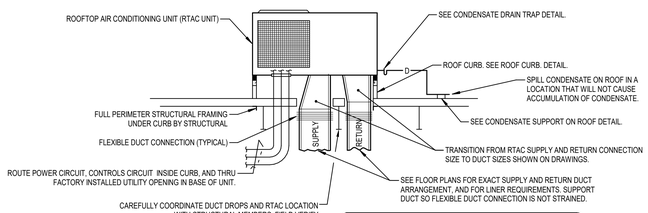

GENERAL NOTES:
1. MAINTAIN MANUFACTURERS RECOMMENDED SERVICE CLEARANCE AROUND UNIT.
2. MAINTAIN MINIMUM 10 FEET FROM ROOFTOP UNITS OUTDOOR AIR INTAKE TO EXHAUST FANS, VTR'S, ETC.
3. MAINTAIN MINIMUM 10 FEET TO ROOF EDGE.

ROOFTOP AIR CONDITIONING UNIT DETAIL
NOT TO SCALE

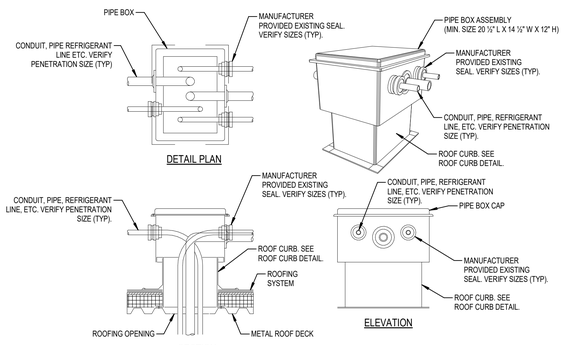

THE BASIS OF DESIGN "THE VAULT" ROOF PENETRATION HOUSING MODEL #AW/20412, ALTA MODEL #AL201412, OR OWNER APPROVED EQUAL.

PIPE BOX ASSEMBLY DETAIL
NOT TO SCALE

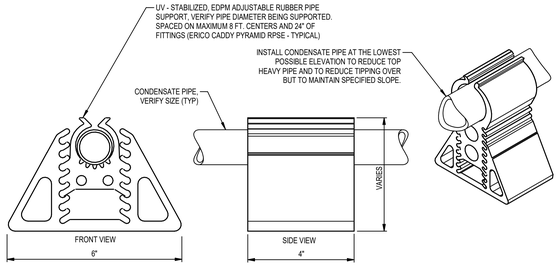

GENERAL: THIS CONDENSATE SUPPORT SHALL BE USED WITH DRAIN ELEVATIONS ABOVE ROOF OF 7" OR LESS. CONDENSATE ELEVATIONS ABOVE 8" SHALL USE ERICO CADDY PYRAMID ST ADJUSTABLE STRUT SUPPORT OR EQUAL BY MIRO.

CONDENSATE PIPE SUPPORT ON ROOF DETAIL
NOT TO SCALE

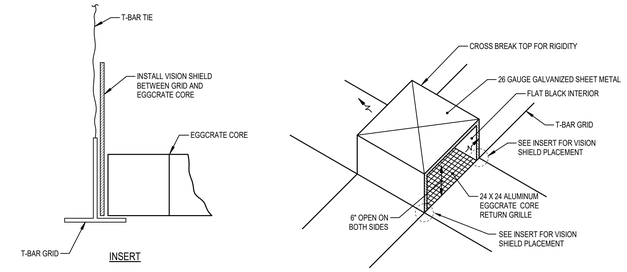

EGGCRATE RETURN GRILLE VISION SHIELD DETAIL
NOT TO SCALE

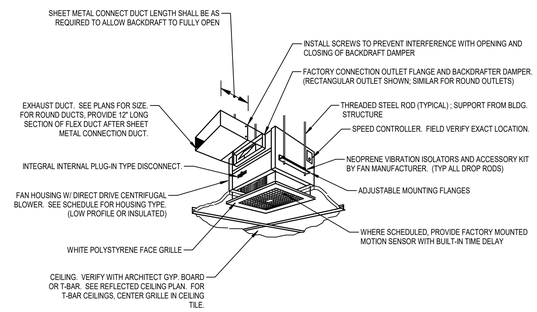

CENTRIFUGAL CEILING MOUNTED EXHAUST FAN DETAIL
NOT TO SCALE

NOTE: DETAIL IS TYPICAL FOR ALL FLEX DUCT RUNOUTS TO DIFFUSERS

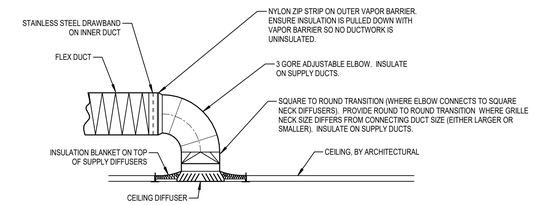

CEILING GRILLE DUCT CONNECTION DETAIL
NOT TO SCALE

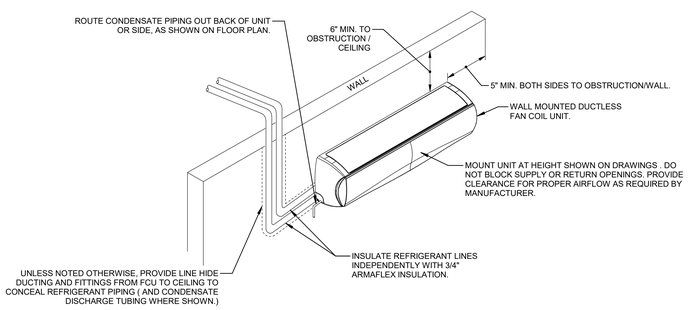

WALL MOUNTED DUCTLESS INDOOR UNIT
NOT TO SCALE

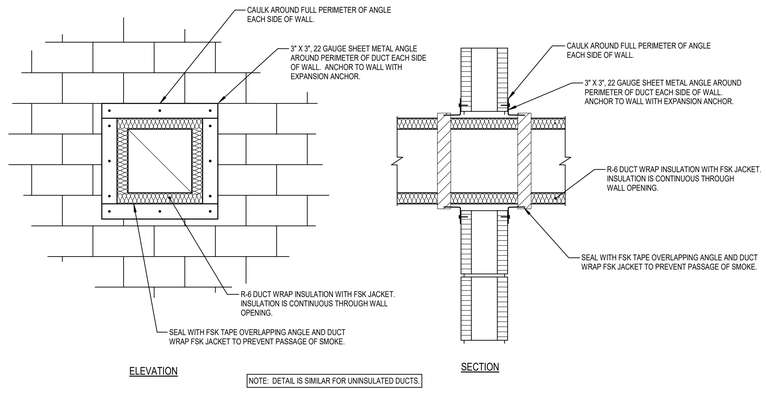

NOTE: DETAIL IS SIMILAR FOR UNINSULATED DUCTS.

DUCT PENETRATION THRU WALL DETAIL
NOT TO SCALE

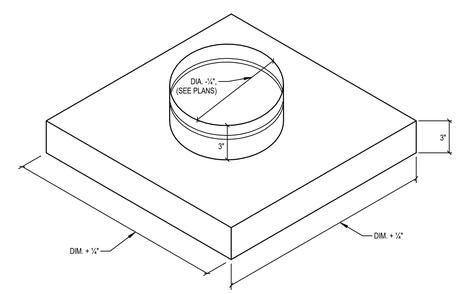

RECTANGULAR TO ROUND FLAT ADAPTER
SCALE: NONE

NOTES: (THIS DETAIL ONLY)
1. PAINT INTERIOR OF BOX MATTE BLACK.
2. MINIMUM 26 GAUGE GALV. SHEET METAL.
3. PROVIDE 1/2" DUCT LINER ON RETURN DUCT APPLICATIONS AND NO LINER ON EXHAUST APPLICATION.
4. ADAPTER MAY BE FABRICATED BY CONTRACTOR OR PROVIDED BY CROWN PRODUCTS MODEL #666 ADAPTER OR EQUAL.

RECTANGULAR TO ROUND FLAT ADAPTER
NOT TO SCALE

NOTE: DETAIL IS SIMILAR FOR UNINSULATED DUCTS.

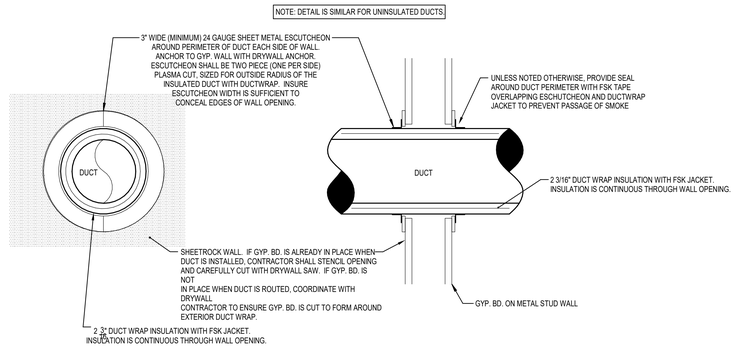

NOTE: THIS DETAIL IS APPLICABLE TO CONCEALED ROUND, FLAT OVAL AND SPIRAL DUCTWORK. THIS DETAIL IS NOT APPLICABLE TO THE INSTALLATION OF EXPOSED NON-RECTANGULAR DUCTWORK.

NON-RECTANGULAR DUCT PENETRATION THRU GYP. BD. WALL DETAIL
NOT TO SCALE

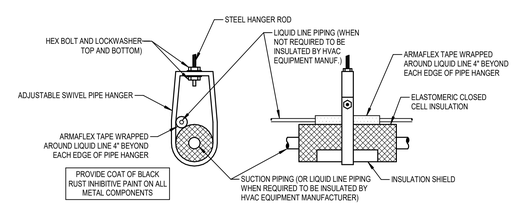

REFRIGERANT PIPE HANGER DETAIL
NOT TO SCALE

PBK
www.pbk.com
770-227-5473
GRIFFIN, GA

AH&P CONSULTING ENGINEERS

HCS - SRO Offices - Warhawk Fieldhouse Modifications
47 LEMON STREET MCDONOUGH, GA 30253

BID SET

HENRY COUNTY SCHOOLS

NORTH

GEORGIA REGISTERED PROFESSIONAL ENGINEER JAMES A. ANDRYSEK

CLIENT	
HENRY COUNTY SCHOOLS	
DATE 06 / 18 / 2026	PROJECT NUMBER 250306

DRAWING HISTORY

No.	Description	Date

CHECKED BY: JDR
DRAWN BY: JDR

MECHANICAL DETAILS

M-502

Plot Stamp:
6/18/2026 11:36:07 AM