# NYLOPLAST DRAIN BASIN WITH STANDARD GRATE

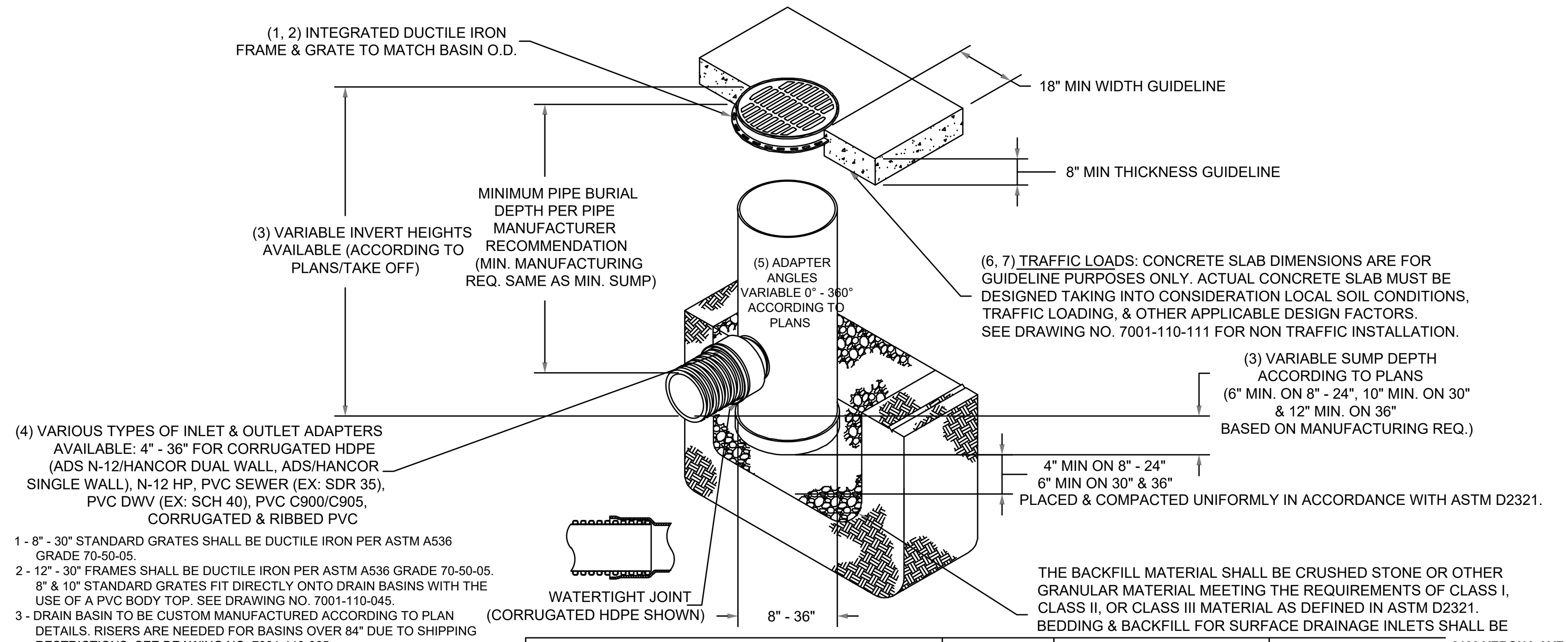


1 - 8" - 30" STANDARD GRATES SHALL BE DUCTILE IRON PER ASTM A536 GRADE 70-50-05.
2 - 12" - 30" FRAMES SHALL BE DUCTILE IRON PER ASTM A536 GRADE 70-50-05. 8" & 10" STANDARD GRATES FIT DIRECTLY ONTO DRAIN BASINS WITH THE USE OF A PVC BODY TOP. SEE DRAWING NO. 7001-110-045.
3 - DRAIN BASIN TO BE CUSTOM MANUFACTURED ACCORDING TO PLAN DETAILS. RISERS ARE NEEDED FOR BASINS OVER 84" DUE TO SHIPPING RESTRICTIONS. SEE DRAWING NO. 7001-110-065.
4 - DRAINAGE CONNECTION STUB JOINT TIGHTNESS SHALL CONFORM TO ASTM D3212 FOR CORRUGATED HDPE (ADS N-12/HANCOR DUAL WALL), N-12 HP, & PVC SEWER (4" - 36").
5 - ADAPTERS CAN BE MOUNTED ON ANY ANGLE 0° TO 360°. TO DETERMINE MINIMUM ANGLE BETWEEN ADAPTERS SEE DRAWING NO. 7001-110-012.
6 - 12" - 30" STANDARD GRATES SHALL MEET H-20 LOAD RATING.
7 - 8" & 10" STANDARD GRATES ARE RATED FOR LIGHT DUTY APPLICATIONS ONLY; NO CONCRETE COLLAR NEEDED FOR LIGHT DUTY RATING.

THIS PRINT DISCLOSES SUBJECT MATTER IN WHICH NYLOPLAST HAS PROPRIETARY RIGHTS. THE RECEIPT OR POSSESSION OF THIS PRINT DOES NOT CONFER, TRANSFER, OR LICENSE THE USE OF THE DESIGN OR TECHNICAL INFORMATION SHOWN HEREIN REPRODUCTION OF THIS PRINT OR ANY INFORMATION CONTAINED HEREIN, OR MANUFACTURE OF ANY ARTICLE HEREFROM, FOR THE DISCLOSURE TO OTHERS IS FORBIDDEN, EXCEPT BY SPECIFIC WRITTEN PERMISSION FROM NYLOPLAST. ©2011 NYLOPLAST DWG SIZE A

DRAWN BY EBC | DATE 1-23-06 | REVISED BY NMH | DATE 06-12-18 | MATERIAL | PROJECT NO./NAME | SCALE 1:40 | SHEET 1 OF 1

Nyloplast — 3130 VERONA AVE, BUFORD, GA 30518, PHN (770) 932-2443, FAX (770) 932-2490, www.nyloplast-us.com

TITLE: DRAIN BASIN WITH STANDARD GRATE QUICK SPEC INSTALLATION DETAIL
DWG NO. 7001-110-144 REV J

# NON TRAFFIC INSTALLATION

## DRAIN BASIN

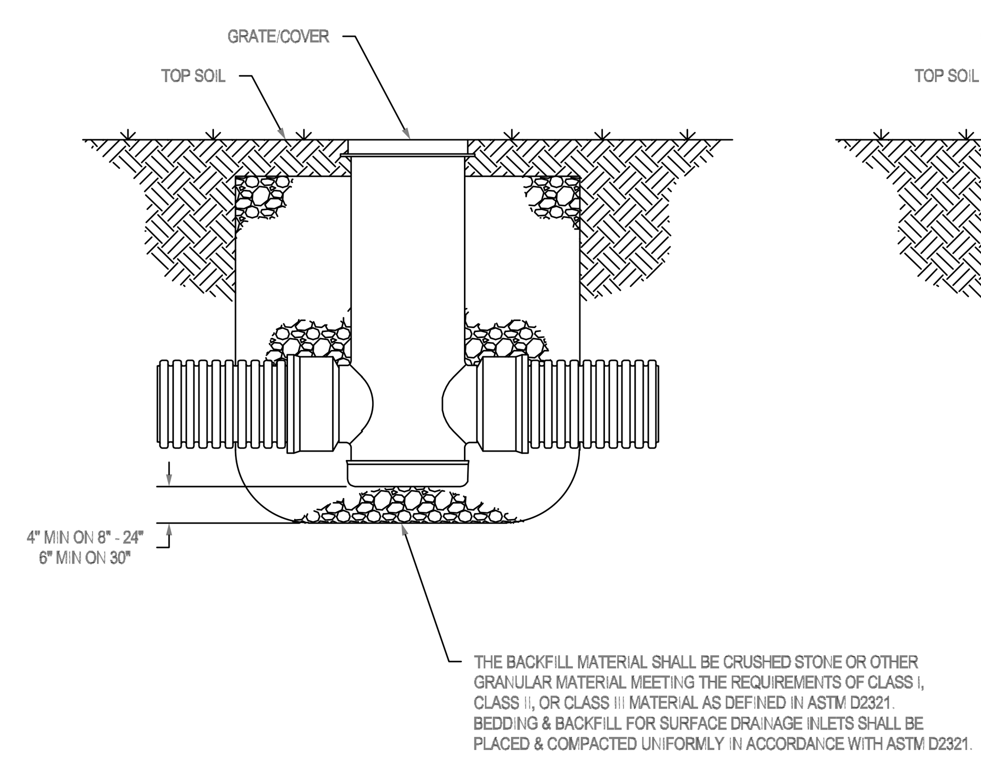


## INLINE DRAIN

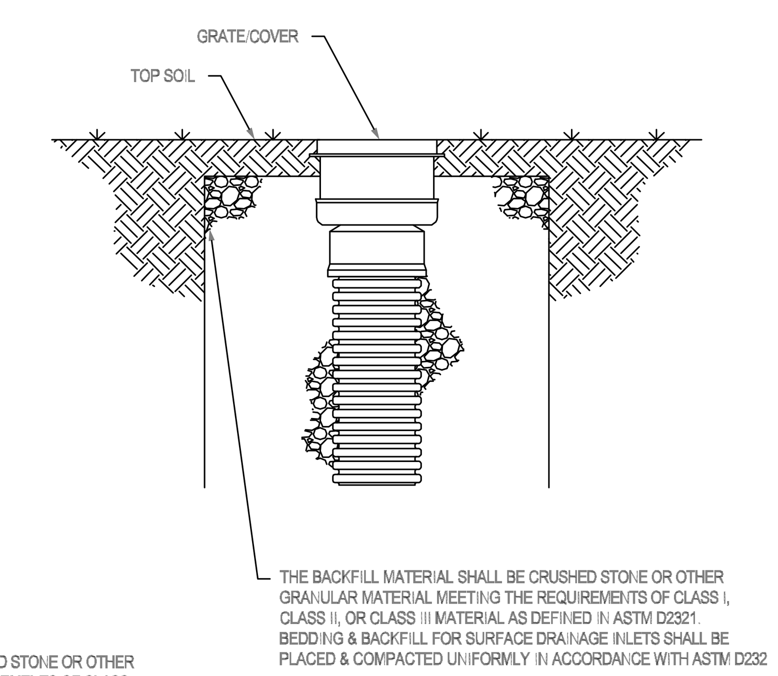


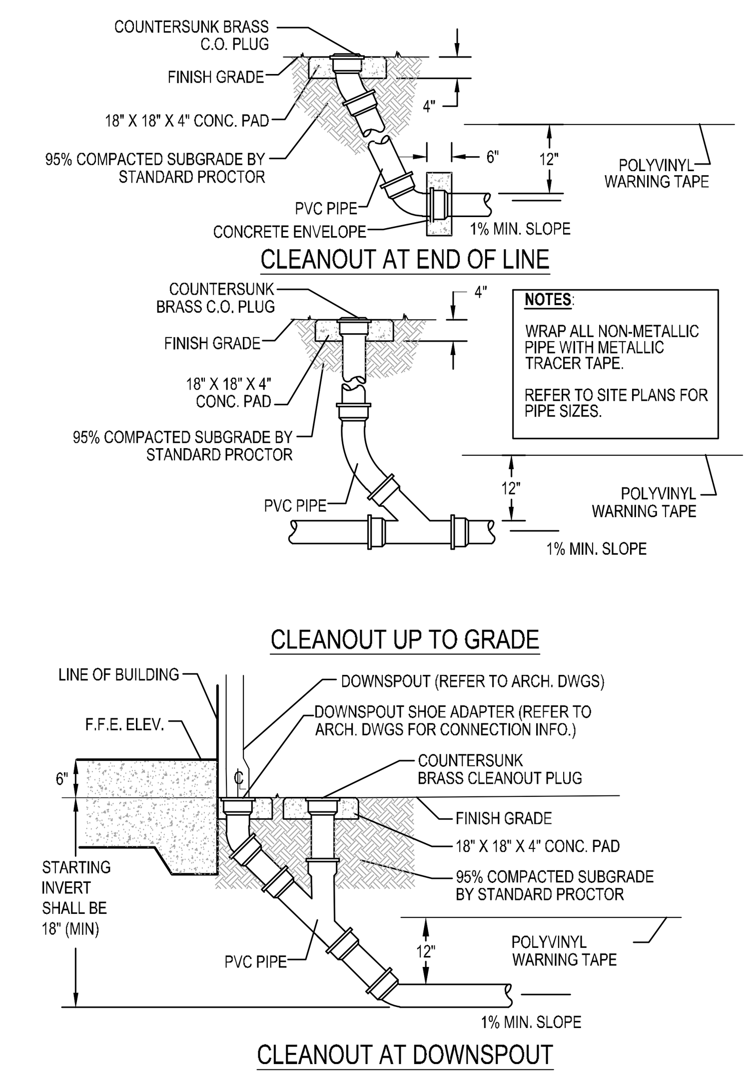


## DOWNSPOUT/RAINLEADER CLEANOUT

N.T.S.

# CLASSES OF EMBEDMENT AND BACKFILL MATERIALS

| ASTM D2321 (1) (CSA B182.11) CLASS | CLASS DESCRIPTION | ASTM D2487 NOTATION | ASTM D2487 DESCRIPTION | AASHTO M43 NOTATION | AASHTO M145 NOTATION | BNQ 2560 | 1 1/2 IN. (40mm) | 3/8" (9.5mm) | No. 4 (4.75mm) | NO. 200 (0.075mm) | LL | PI | Cu | Cc |
|---|---|---|---|---|---|---|---|---|---|---|---|---|---|---|
| I (2) | CRUSHED ROCK, ANGULAR 3 | N/A | ANGULAR CRUSHED STONE OR ROCK, CRUSHED GRAVEL, CRUSHED SLAG; LARGE VOIDS WITH LITTLE OR NO FINES | 5, 56, 57 (4) 6, 67 (4) | N/A | | 100% | <25% | <15% | <12% | NON PLASTIC | | N/A | |
| II | CLEAN, COARSE-GRAINED SOILS | GW | WELL-GRADED GRAVEL, GRAVEL-SAND MIXTURES; LITTLE OR NO FINES | 5, 6 | A1, A3 | CG-14, MG-20 | 100% | | <50% of "COARSE FRACTION" | <5% | NON PLASTIC | | >4 | 1 to 3 |
| | | GP | POORLY-GRADED GRAVELS, GRAVEL-SAND MIXTURES; LITTLE OR NO FINES | 56, 57, 67 | | | | | | | | | 4 | <1 or >3 |
| | | SW | WELL-GRADED SANDS, GRAVELLY SANDS; LITTLE OR NO FINES | | | | | | >50% of "COARSE FRACTION" | | | | >6 | 1 to 3 |
| | | SP 6 | POORLY-GRADED SANDS, GRAVELLY SAND; LITTLE OR NO FINES | | | | | | | | | | <6 | <1 or >3 |
| | COARSE-GRAINED SOILS, BODERLINE CLEAN TO W/FINES | GW-GC, SP-SM | SANDS AND GRAVELS WHICH ARE BORDERLINE BETWEEN CLEAN AND WITH FINES | N/A | | | 100% | | VARIES | 5% TO 12% | NON PLASTIC | | SAME AS FOR GW, GP, SW AND SP | |
| III | COURSE-GRAINED SOILS WITH FINES | GM | SILTY GRAVELS, GRAVEL-SAND-SILT MIXTURES | GRAVEL & SAND WITH <10% FINES | A-2-4, A-2-5, A-2-6, OR A-4 OR A-6 SOILS WITH MORE THAN 30% RETAINED ON #200 SIEVE | | 100% | | <50% of "COARSE FRACTION" | 12% TO 50% | N/A | <4 OR <"A" LINE | N/A | |
| | | GC | CLAYEY GRAVELS, GRAVEL-SAND-CLAY MIXTURES | | | | | | | | | <7 & >"A" LINE | | |
| | | SM | SILTY SANDS, SAND-CLAY MIXTURES | | | | | | >50% of "COARSE FRACTION" | | | >4 OR <"A" LINE | | |
| | | SC | CLAYEY SANDS, SAND-CLAY MIXTURES | | | | | | | | | >7 & >"A" LINE | | |
| | INORGANIC FINE-GRAINED SOILS | ML | INORGANIC SILTS AND VERY FINE SANDS, ROCK FLOUR, SILTY OR CLAYEY FINE SANDS, SILTS WITH SLIGHT PLASTICITY | | | | | | 100% | > 30% (RETAINED) | <50 | <4 OR <"A" LINE | | |
| | | CL | INORGANIC CLAYS OF LOW TO MEDIUM PLASTICITY; GRAVELLY, SANDY, OR SILTY CLAYS; LEAN CLAYS | | | | | | | > 30% (RETAINED) | | >7 & >"A" LINE | | |
| IV (5) | INORGANICS FINE-GRAINED SOILS | ML | INORGANIC SILTS AND VERY FINE SANDS, ROCK FLOUR, SILTY OR CLAYEY FINE SANDS, SILTS WITH SLIGHT PLASTICITY | N/A | A-2-7 OR A-4 OR A-6 SOILS WITH 30% OR LESS RETAINED ON #200 SIEVE | | 100% | | 100% | < 30% (Retained) | <50 | <4 or <"A" LINE | N/A | |
| | | CL | INORGANIC CLAYS OF LOW TO MEDIUM PLASTICITY; GRAVELLY, SANDY, OR SILTY CLAYS; LEAN CLAYS | N/A | | | | | | | | >7 & >"A" LINE | | |
| V (7) | INORGANIC FINE-GRAINED SOILS | MH | INORGANIC SILTS, MICACEOUS OR DIATOMACEOUS FINE SANDY OR SILTY SOILS, ELASTIC SILTS | N/A | A5, A7 | | 100% | | 100% | >50% | >50 | <"A" LINE | N/A | |
| | | CH | INORGANIC CLAYS OF HIGH PLASTICITY, FAT CLAYS | N/A | | | | | | | | >"A" LINE | | |
| | ORGANIC SOILS OR HIGHLY ORGANIC SOILS | OL | ORGANIC SILTS AND ORGANIC SILTY CLAYS OF LOW PLASTICITY | N/A | | | 100% | | 100% | >50% | <50 | <4 OR <"A" LINE | N/A | |
| | | OH | ORGANIC CLAYS OF MEDIUM TO HIGH PLASTICITY, ORGANIC SILTS | N/A | | | | | | | >50 | <"A" LINE | | |
| | | PT | PEAT AND OTHER HIGH ORGANIC SOILS | N/A | | | | | | | | | | |

(Sieve sizes are PERCENTAGE PASSING SIEVE SIZES; LL and PI are ATTERBERG LIMITS; Cu and Cc are COEFFICIENTS; all under ASTM D2321 (1) (CSA B182.11).)

NOTES:
1. REFER TO ASTM D2321 / CSA B182.11 / BNQ 2560 FOR MORE COMPLETE SOIL DESCRIPTIONS.
2. CLASS I MATERIALS ALLOW FOR A BROADER RANGE OF FINES THAN PREVIOUS VERSIONS OF D2321 / B182.11. WHEN SPECIFYING CLASS I MATERIAL FOR INFILTRATION SYSTEMS, THE ENGINEERING SHALL INCLUDE A REQUIREMENT FOR AN ACCEPTABLE LEVEL OF FINES.
3. ALL PARTICLE FACES SHALL BE FRACTURED.
4. ASSUMES LESS THAN 25% PASSES THE 3/8" SIEVE.
5. CLASS IV MATERIALS REQUIRE A GEOTECHNICAL EVALUATION PRIOR TO USE AND SHOULD ONLY BE USED AS BACKFILL UNDER THE GUIDANCE OF A QUALIFIED ENGINEER.
6. UNIFORM FINE SANDS (SP) WITH MORE THAN 50% PASSING A 100 SIEVE BEHAVE LIKE SILTS AND SHOULD BE TREATED AS CLASS III SOILS IF ALLOWED.
7. CLASS V MATERIALS SHALL NOT BE PERMITTED AS BEDDING AND BACKFILL MATERIAL.

| REV. | DESCRIPTION | BY | MM/DD/YY | CHK'D |
|---|---|---|---|---|
| 2 | REV. DRAWING NAME OR NUMBER | TJR | 01/28/16 | |

NOTE: ALL DIMENSIONS ARE ± 1/2 FOOT.

© 2016 ADS, INC.

ADVANCED DRAINAGE SYSTEMS, INC. ("ADS") HAS PREPARED THIS DETAIL BASED ON INFORMATION PROVIDED TO ADS. THIS DRAWING IS INTENDED TO DEPICT THE COMPONENTS AS REQUESTED. ADS HAS NOT PERFORMED ANY ENGINEERING OR DESIGN SERVICES FOR THIS PROJECT, NOR HAS ADS INDEPENDENTLY VERIFIED THE INFORMATION SUPPLIED. THE INSTALLATION DETAILS PROVIDED HEREIN ARE GENERAL RECOMMENDATIONS AND ARE NOT SPECIFIC FOR THIS PROJECT. THE DESIGN ENGINEER SHALL REVIEW THESE DETAILS PRIOR TO CONSTRUCTION. IT IS THE DESIGN ENGINEERS RESPONSIBILITY TO ENSURE THE DETAILS PROVIDED HEREIN MEETS OR EXCEEDS THE APPLICABLE NATIONAL, STATE, OR LOCAL REQUIREMENTS AND TO ENSURE THAT THE DETAILS PROVIDED HEREIN ARE ACCEPTABLE FOR THIS PROJECT.

DIA. DET/RET SYSTEM — CLASSES OF EMBEDMENT AND AND BACKFILL MATERIALS — DRAWING NUMBER: STD-109
ADVANCED DRAINAGE SYSTEMS, INC. — 4640 TRUEMAN BLVD, HILLIARD, OHIO 43026
DRAWN BY: TJR | DATE: 06/01/15 | CHK'D BY: | SCALE: NTS | SHEET 1 OF 1

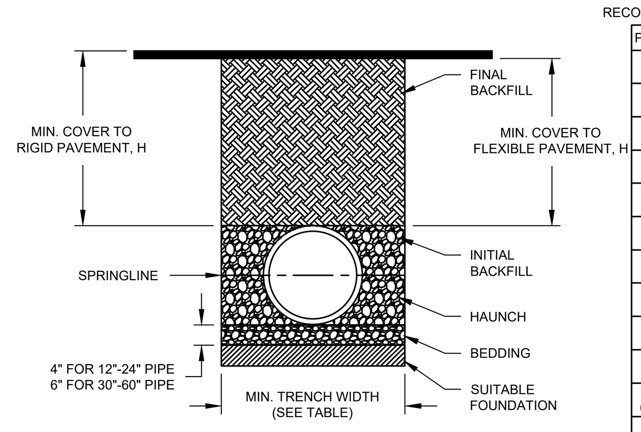


RECOMMENDED MINIMUM TRENCH WIDTHS

| PIPE DIAM. | MIN. TRENCH WIDTH |
|---|---|
| 4" (100mm) | 21" (533mm) |
| 6" (150mm) | 23" (584mm) |
| 8" (200mm) | 26" (660mm) |
| 10" (250mm) | 28" (711mm) |
| 12" (300mm) | 30" (762mm) |
| 15" (375mm) | 34" (864mm) |
| 18" (450mm) | 39" (991mm) |
| 24" (600mm) | 48" (1219mm) |
| 30" (750mm) | 56" (1422mm) |
| 36" (900mm) | 64" (1626mm) |
| 42" (1050mm) | 72" (1829mm) |
| 48" (1200mm) | 80" (2032mm) |
| 60" (1500mm) | 96" (2438mm) |

MINIMUM RECOMMENDED COVER BASED ON VEHICLE LOADING CONDITIONS**

| PIPE DIAM. | SURFACE LIVE LOADING CONDITION: H-25 | SURFACE LIVE LOADING CONDITION: HEAVY CONSTRUCTION (75T AXLE LAOD) * |
|---|---|---|
| 12" - 48" (300mm - 1200mm) | 12" (305mm) | 48" (1219mm) |
| 60" (1500mm) | 24" (610mm) | 60" (1524mm) |

* VEHICLES IN EXCESS OF 75T MAY REQUIRE ADDITIONAL COVER
**SEE BACKFILL REQUIREMENTS IN NOTE 6.

MAXIMUM RECOMMENDED COVER BASED ON VECHICLE LOADING CONDITIONS

| PIPE DIAM. | CLASS I COMPACTED | CLASS I DUMPED | CLASS II 95% | CLASS II 90% | CLASS III 95% |
|---|---|---|---|---|---|
| 4" (100mm) | 37 (11.3m) | 18 (5.5m) | 25 (7.6m) | 18 (5.5m) | 18 (5.5m) |
| 6" (150mm) | 44 (13.4m) | 20 (6.1m) | 29 (8.8m) | 20 (6.1m) | 21 (6.4m) |
| 8" (200mm) | 32 (9.8m) | 15 (4.6m) | 22 (6.7m) | 15 (4.6m) | 16 (4.9m) |
| 10" (250mm) | 38 (11.6m) | 18 (5.5m) | 26 (7.9m) | 18 (5.5m) | 18 (5.5m) |
| 12" (300mm) | 35 (10.7m) | 17 (5.2m) | 24 (7.3m) | 17 (5.2m) | 17 (5.2m) |
| 15" (375mm) | 38 (11.6m) | 17 (5.2m) | 25 (7.6m) | 17 (5.2m) | 18 (5.5m) |
| 18" (450mm) | 36 (11.0m) | 17 (5.2m) | 24 (7.3m) | 17 (5.2m) | 17 (5.2m) |
| 24" (600mm) | 28 (8.5m) | 13 (4.0m) | 20 (6.1m) | 13 (4.0m) | 14 (4.3m) |
| 30" (750mm) | 28 (8.5m) | 13 (4.0m) | 20 (6.1m) | 13 (4.0m) | 14 (4.3m) |
| 36" (900mm) | 26 (7.9m) | 12 (3.7m) | 18 (5.5m) | 13 (4.0m) | 13 (4.0m) |
| 42" (1050mm) | 23 (7.0m) | 11 (3.4m) | 16 (4.9m) | 11 (3.4m) | 11 (3.4m) |
| 48" (1200mm) | 25 (7.6m) | 11 (3.4m) | 17 (5.2m) | 11 (3.4m) | 12 (3.7m) |
| 60" (1500mm) | 25 (7.6m) | 11 (3.4m) | 17 (5.2m) | 11 (3.4m) | 12 (3.7m) |

FILL HEIGHT TABLE GENERATED USING AASHTO SECTION 12, LOAD RESISTANCE FACTOR DESIGN (LRFD) PROCEDURE WITH THE FOLLOWING ASSUMPTIONS:
NO HYDROSTATIC PRESSURE,
UNIT WEIGHT OF SOIL (Ys) = 120 PCF

NOTES:

1. ALL PIPE SYSTEMS SHALL BE INSTALLED IN ACCORDANCE WITH ASTM D2321, "STANDARD PRACTICE FOR UNDERGROUND INSTALLATION OF THERMOPLASTIC PIPE FOR SEWERS AND OTHER GRAVITY FLOW APPLICATIONS", LATEST ADDITION

2. MEASURES SHOULD BE TAKEN TO PREVENT MIGRATION OF NATIVE FINES INTO BACKFILL MATERIAL, WHEN REQUIRED.

3. FOUNDATION: WHERE THE TRENCH BOTTOM IS UNSTABLE, THE CONTRACTOR SHALL EXCAVATE TO A DEPTH REQUIRED BY THE ENGINEER AND REPLACE WITH SUITABLE MATERIAL AS SPECIFIED BY THE ENGINEER. AS AN ALTERNATIVE AND AT THE DISCRETION OF THE DESIGN ENGINEER, THE TRENCH BOTTOM MAY BE STABILIZED USING A GEOTEXTILE MATERIAL.

4. BEDDING: SUITABLE MATERIAL SHALL BE CLASS I, II OR III. THE CONTRACTOR SHALL PROVIDE DOCUMENTATION FOR MATERIAL SPECIFICATION TO ENGINEER. UNLESS OTHERWISE NOTED BY THE ENGINEER, MINIMUM BEDDING THICKNESS SHALL BE 4" (100mm) FOR 4"-24" (100mm-600mm); 6" (150mm) FOR 30"-60" (750mm-1500mm).

5. INITIAL BACKFILL: SUITABLE MATERIAL SHALL BE CLASS I, II OR III IN THE PIPE ZONE EXTENDING TO THE CROWN OF PIPE. THE CONTRACTOR SHALL PROVIDE DOCUMENTATION FOR MATERIAL SPECIFICATION TO ENGINEER. MATERIAL SHALL BE INSTALLED AS REQUIRED IN ASTM D2321, LATEST EDITION.

6. MINIMUM COVER: MINIMUM COVER, H, IN NON-TRAFFIC APPLICATIONS (GRASS OR LANDSCAPE AREAS) IS 12" FROM THE TOP OF PIPE TO GROUND SURFACE. ADDITIONAL COVER MAY BE REQUIRED TO PREVENT FLOTATION. FOR TRAFFIC APPLICATIONS, MINIMUM COVER, H, IS 12" UP TO 48" DIAMETER PIPE AND 24" OF COVER FOR 60" DIAMETER PIPE, MEASURED FROM TOP OF PIPE TO BOTTOM OF FLEXIBLE PAVEMENT OR TO TOP OF RIGID PAVEMENT. FOR TRAFFIC APPLICATIONS WITH LESS THAN FOUR FEET OF COVER, EMBEDMENT OF THE PIPE SHALL BE USING ONLY A CLASS I OR CLASS II BACKFILL.

| REV. | DESCRIPTION | BY | MM/DD/YY | CHK'D |
|---|---|---|---|---|
| 6 | INITIAL BACKFILL | JAB | 04/02/20 | |

NOTE: ALL DIMENSIONS ARE ± 1/2 FOOT.

© 2020 ADS, INC.

ADVANCED DRAINAGE SYSTEMS, INC. ("ADS") HAS PREPARED THIS DETAIL BASED ON INFORMATION PROVIDED TO ADS. THIS DRAWING IS INTENDED TO DEPICT THE COMPONENTS AS REQUESTED. ADS HAS NOT PERFORMED ANY ENGINEERING OR DESIGN SERVICES FOR THIS PROJECT, NOR HAS ADS INDEPENDENTLY VERIFIED THE INFORMATION SUPPLIED. THE INSTALLATION DETAILS PROVIDED HEREIN ARE GENERAL RECOMMENDATIONS AND ARE NOT SPECIFIC FOR THIS PROJECT. THE DESIGN ENGINEER SHALL REVIEW THESE DETAILS PRIOR TO CONSTRUCTION. IT IS THE DESIGN ENGINEERS RESPONSIBILITY TO ENSURE THE DETAILS PROVIDED HEREIN MEETS OR EXCEEDS THE APPLICABLE NATIONAL, STATE, OR LOCAL REQUIREMENTS AND TO ENSURE THAT THE DETAILS PROVIDED HEREIN ARE ACCEPTABLE FOR THIS PROJECT.

DIA. DET/RET SYSTEM — TRENCH INSTALLATION DETAIL (N-12 PER AASHTO) — DRAWING NUMBER: STD-101
ADVANCED DRAINAGE SYSTEMS, INC. — 4640 TRUEMAN BLVD, HILLIARD, OHIO 43026
DRAWN BY: TJR | DATE: 12/29/16 | CHK'D BY: | SCALE: NTS | SHEET 1 OF 1

## OWNER/DEVELOPER
COMPANY: MADISON METHODIST CHURCH INC.
ADDRESS: 1091 CONFEDERATE RD
MADISON, GA 30650
PHONE: (706) 521-0017
CONTACT: MATTHEW MITCHELL
EMAIL:MATTHEW@MADISONMC.NET

## CONTRACTOR
COMPANY: SUNBELT BUILDERS
ADDRESS: 10641 HIGHWAY 36
COVINGTON, GA 30014
CONTACT: MIKE MCCROREY JR.
PHONE: 770.786.3031
EMAIL: MMCCROREY@SUNBELTBUILDERS.COM

## SURVEYOR
COMPANY: GEORGIA CIVIL, INC.
ADDRESS: P.O. BOX 896 MADISON, GA 30650
PHONE: 706.342.1104
CONTACT: BRIAN SLATE
EMAIL: BSLATE@GEORGIACIVIL.COM

## SITE DESIGNER
COMPANY: GEORGIA CIVIL, INC.
ADDRESS: P.O. BOX 896
MADISON, GA 30650
PHONE: 706.342.1104

JASON P. BROWN
LEVEL II CERTIFIED DESIGN PROFESSIONAL
#53274 - EXP. 05.01.2026

24-HOUR CONTACT
JASON BROWN
(770) 713-9972

GEORGIA811 www.Georgia811.com
Contact 811 before you dig

Utilities/Services shown are for Contractors' convenience. Items are shown schematically and neither the site design professional nor the owner assumes any responsibility for variances in their actual location. This plan may not show and/or may incorrectly show utilities located on site. Contractor shall be responsible to secure and use the services of a private utility locator firm during the entire course of work and shall pay for said services. Contractor shall locate utilities prior to any disturbance (including field verifying location and depth of utilities that are to be saved and protected). Contractor shall notify the site design professional of any utility conflicts prior to installation of new utilities, grading, etc. The Contractor, at their expense, shall be responsible to repair, replace and/or relocate, as necessary, any utilities damaged, whether shown or not. Abandonment, relocation, etc. of utilities shall be coordinated with the respective utility company.

georgia civil
CIVIL ENGINEERING
LANDSCAPE ARCHITECTURE
LAND SURVEYING
311 N. Main St, Ste. 101, Unit C
P.O. Box 896 | Madison, GA 30650
P: 706.342.1104
www.georgiacivil.com

Professional Seal

GEORGIA REGISTERED PROFESSIONAL ENGINEER NO. PE031684 JASON P. BROWN

Project Information

# PARKING ADD. & COURTYARD RENOVATION
1091 CONFEDERATE RD
MADISON, GA 30650
ZONING: R1

| DRAWING DATE: | 2/11/2026 |
|---|---|
| DRAWN BY: | DLD |
| CHECKED BY: | JPB |

REVISIONS

| DATE: | DESCRIPTION: |
|---|---|
| | |

© Copyright 2025 georgia civil, inc.
This document and its reproduction are the property of Georgia Civil, Inc. and may not be reproduced, published, or used in whole or in part without the written consent of Georgia Civil, Inc.

Sheet Title

SWM DETAILS

Sheet Number

C-4.1