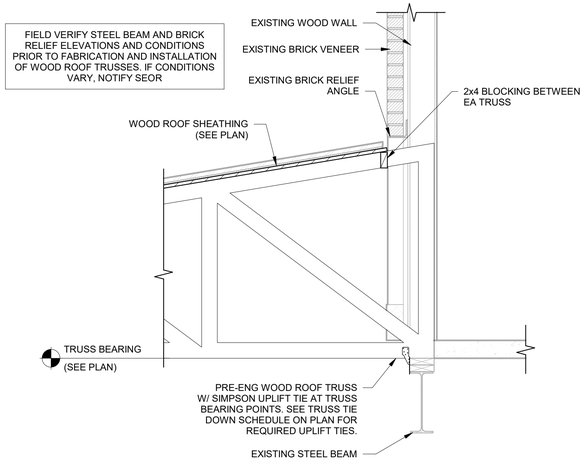

WOOD ROOF FRAMING AT EXISTING STEEL BEAM - SECTION 1 S602

SCALE: 3/4" = 1'-0"

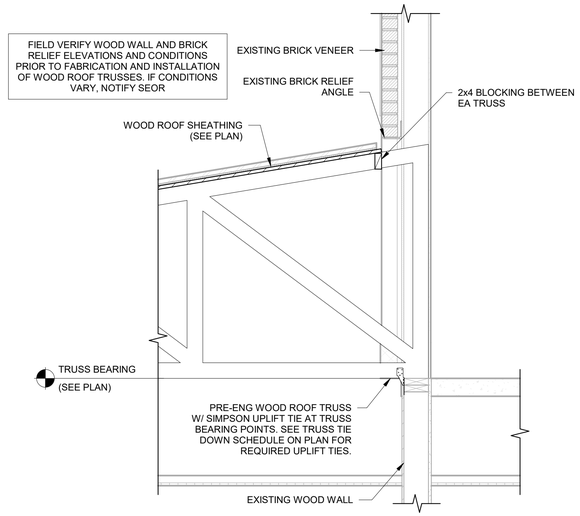

WOOD ROOF FRAMING AT EXISTING WALL - SECTION 2 S602

SCALE: 3/4" = 1'-0"

Brown AND Caldwell

BROWN AND CALDWELL
900 HAMMOND DRIVE, SUITE 500
ATLANTA, GA 30328

wendel

CONSTRUCTION DOCUMENTS

NCWSA
NEWTON COUNTY WATER & SEWERAGE AUTHORITY

NCWSA OFFICE ADDITION

REVISIONS

REV	DATE	DESCRIPTION

LINE IS 2 INCHES AT FULL SIZE

DESIGNED: Designer
DRAWN: Author
CHECKED: Checker
CHECKED:
APPROVED: Approver

FILENAME

BC PROJECT NUMBER
616202
CLIENT PROJECT NUMBER

WOOD ROOF FRAMING DETAILS

DRAWING NUMBER
S602

Plot Date: 4/27/2026 6:48:36 PM Path: Autodesk Docs://NCWSA Admin Bldg_ V25/0250683-NCWSA Office Addition-R25-STRUCT.rvt