WINDOW TYPES

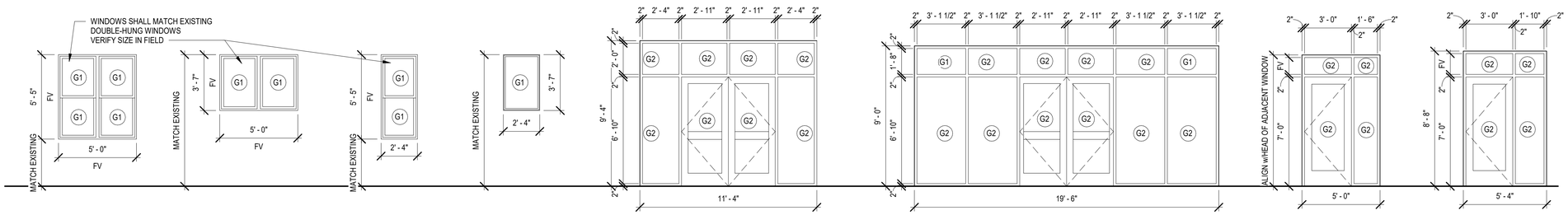

WINDOW TYPE A | WINDOW TYPE B | WINDOW TYPE C | WINDOW TYPE C-1 | WINDOW TYPE D | WINDOW TYPE E | WINDOW TYPE F | WINDOW TYPE F-1

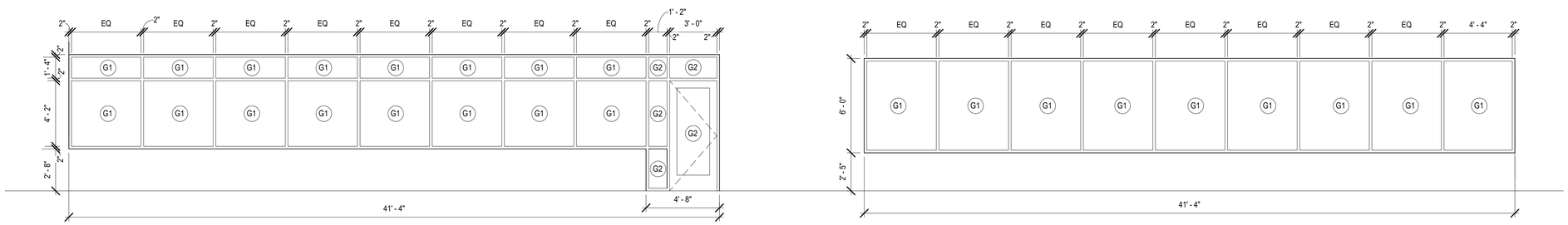

WINDOW TYPE G | WINDOW TYPE H

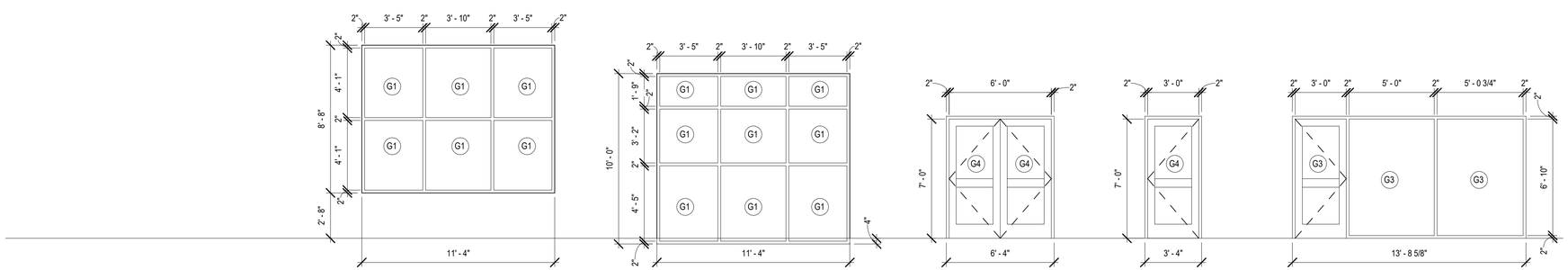

WINDOW TYPE K | WINDOW TYPE L | WINDOW TYPE M | WINDOW TYPE N | WINDOW TYPE O

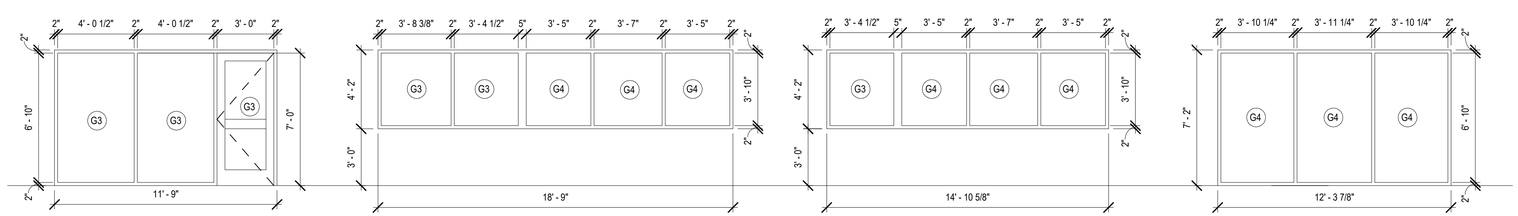

WINDOW TYPE P | WINDOW TYPE Q | WINDOW TYPE R | WINDOW TYPE S

GLAZING LEGEND:

- G1 — 1" INSULATED LOW-E GLAZING
- G2 — 1" INSULATED LOW-E TEMPERED GLAZING
- G3 — 1/4" CLEAR TEMPERED GLASS
- G4 — FIRE RATED SAFETY GLAZING

Brown AND Caldwell

BROWN AND CALDWELL
900 HAMMOND DRIVE, SUITE 500
ATLANTA, GA 30328

wendel

THIS DRAWING IS NOT VALID FOR CONSTRUCTION PURPOSES UNLESS IT BEARS THE SEAL AND SIGNATURE OF A DULY REGISTERED PROFESSIONAL

CONSTRUCTION DOCUMENTS

NCWSA — NEWTON COUNTY WATER & SEWERAGE AUTHORITY

NCWSA OFFICE ADDITION

REVISIONS

REV	DATE	DESCRIPTION

LINE IS 2 INCHES AT FULL SIZE

DESIGNED: Designer
DRAWN: Author
CHECKED: Checker
CHECKED:
APPROVED: Approver

FILENAME

BC PROJECT NUMBER
616202
CLIENT PROJECT NUMBER

WINDOW TYPES

DRAWING NUMBER
A921

Plot Date: 4/27/2026 11:27:14 PM Path: C:\Users\mw4\OneDrive - Wendel\Documents\616202-NCWSA-ARCH_V25(Central)_mwordenFW4J7.rvt