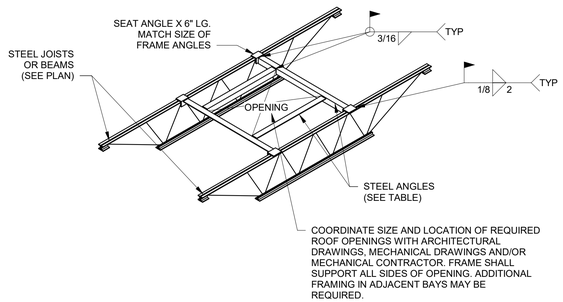

SPAN	ANGLE SIZE
UP TO 4'-0"	L3X3X3/16
4'-1" TO 6'-0"	L4X3X1/4 (LLV)
6'-1" TO 8'-0"	L5X3X1/4 (LLV)
8'-1" TO 10'-0"	L6X4X5/16 (LLV)

NOTES:

1. PROVIDE FRAMING AT ROOF DRAINS.
2. WELD/CONNECT DECK TO ALL FRAMING AT 6" OC MAXIMUM SPACING. COORDINATE WITH ENGINEER FOR SPECIAL DETAILS REQUIRED TO CONNECT ANGLES TO EXISTING DECK IN AN INSTALLATION OF NEW UNIT ON EXISTING ROOF FRAMING.
3. WHEN JOIST BRIDGING CONFLICTS WITH ROOF OPENING FRAMES, STOP BRIDGING AT EACH SIDE OF OPENING, PROVIDE CROSS BRIDGING AT LAST BRIDGING SPACE EACH SIDE OF OPENING AND CONNECT ENDS OF BRIDGING TO OPENING FRAMING. ADD ADDITIONAL BRIDGING AND CROSS BRIDGING ON EACH SIDE OF OPENING ON EACH SIDE OF CUT BRIDGING AREA WITH BRIDGING EXTENDED ONE BAY BEYOND EACH SIDE OF OPENING.
4. ANCHOR EQUIPMENT AND CURB TO MISCELLANEOUS FRAMING SHOWN AS REQUIRED FOR WIND AND/OR SEISMIC FORCES. COORDINATE WITH EQUIPMENT/CURB MANUFACTURER (CONNECTION DESIGN NOT BY PES STRUCTURAL ENGINEERS).
5. THIS DETAIL IS NOT APPLICABLE TO ROOFTOP EQUIPMENT CURBS. REFER TO TYPICAL EQUIPMENT CURB SUPPORT DETAIL FOR CURB SUPPORT FRAMING.

TYPICAL ROOF OPENING DECK SUPPORT FRAMING - ISOMETRIC

SCALE: 3/8" = 1'-0"

1 / S521

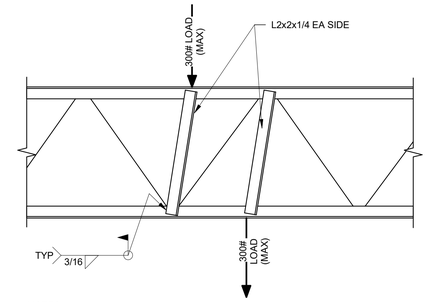

NOTES:

1. STRUT IS NOT REQUIRED WHERE THE DISTANCE FROM PANEL POINT DOES NOT EXCEED 3" FOR K-JOISTS.
2. STRUT IS NOT REQUIRED WHERE NOMINAL CONCENTRATED LOAD DOES NOT EXCEED 100 LBS AND THE ATTACHMENTS ARE CONCENTRIC TO THE CHORD.

TYPICAL JOIST CHORD SUPPORT - SECTION

SCALE: 1" = 1'-0"

2 / S521

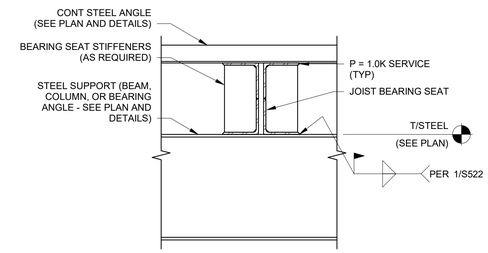

NOTES:

1. JOIST DESIGN ENGINEER SHALL DESIGN BEARING SEAT FOR LATERAL LOAD INDICATED.
2. FABRICATOR SHALL INSTALL BEARING SEAT STIFFENERS IF REQUIRED BY DESIGN.

TYPICAL JOIST ROLLOVER DESIGN FORCE - SECTION

SCALE: 1" = 1'-0"

3 / S521

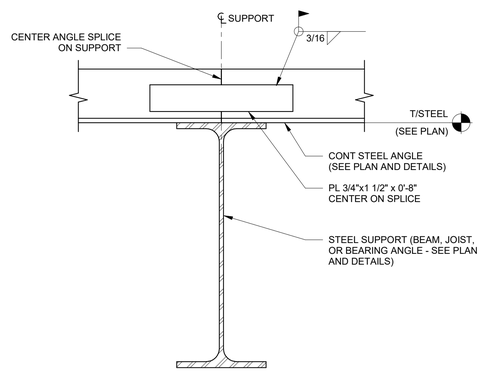

TYPICAL CONTINUOUS ROOF ANGLE SPLICE - SECTION

SCALE: 3" = 1'-0"

4 / S521

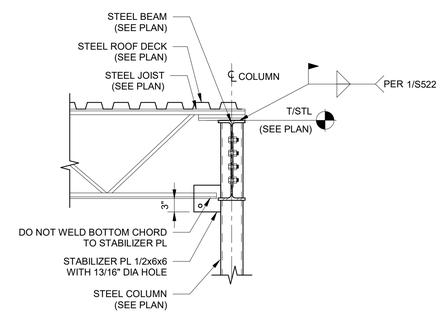

TYPICAL JOIST AT COLUMN CONNECTION - SECTION

SCALE: 3/4" = 1'-0"

5 / S521

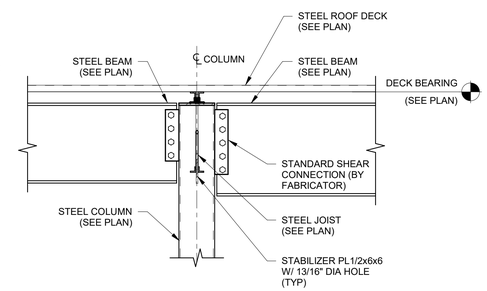

TYPICAL BEAM/GIRDER @ COLUMN CONNECTION - SECTION

SCALE: 3/4" = 1'-0"

6 / S521

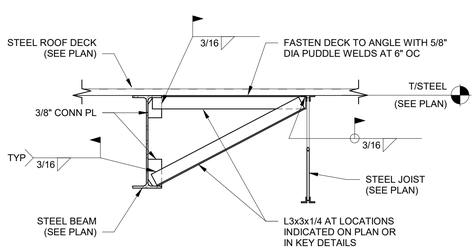

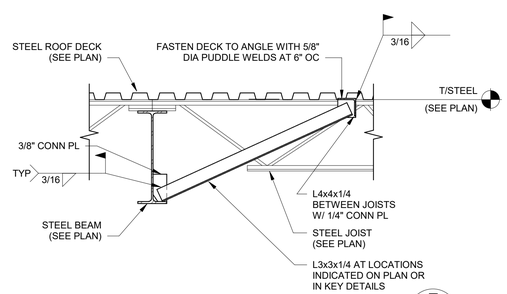

TYPICAL BEAM BRACING AT ROOF - SECTION

SCALE: 3/4" = 1'-0"

7 / S521

PES STRUCTURAL ENGINEERS

ADDRESS 1852 Century Place NE, Suite 201, Atlanta Georgia 30345
PHONE 770.457.5923 **WEB** www.pesengineers.com
PES PROJECT NUMBER: 0250683
PES GEORGIA LICENSE NUMBER: PEF000799
EXPIRATION DATE: 6/30/2028

Brown AND Caldwell

BROWN AND CALDWELL
900 HAMMOND DRIVE, SUITE 500
ATLANTA, GA 30328

wendel

THIS DRAWING IS NOT VALID FOR CONSTRUCTION PURPOSES UNLESS IT BEARS THE SEAL AND SIGNATURE OF A DULY REGISTERED PROFESSIONAL

CONSTRUCTION DOCUMENTS
07/01/2026

NCWSA OFFICE ADDITION

REVISIONS

REV	DATE	DESCRIPTION

LINE IS 2 INCHES AT FULL SIZE

DESIGNED: Designer
DRAWN: Author
CHECKED: Checker
CHECKED:
APPROVED: Approver

FILENAME

BC PROJECT NUMBER
616202
CLIENT PROJECT NUMBER

STEEL ROOF FRAMING DETAILS

DRAWING NUMBER
S521

Plot Date: 7/1/2026 12:51:45 PM Path: Autodesk Docs://NCWSA Admin Bldg_ V25/0250683-NCWSA Office Addition-R25-STRUCT.rvt