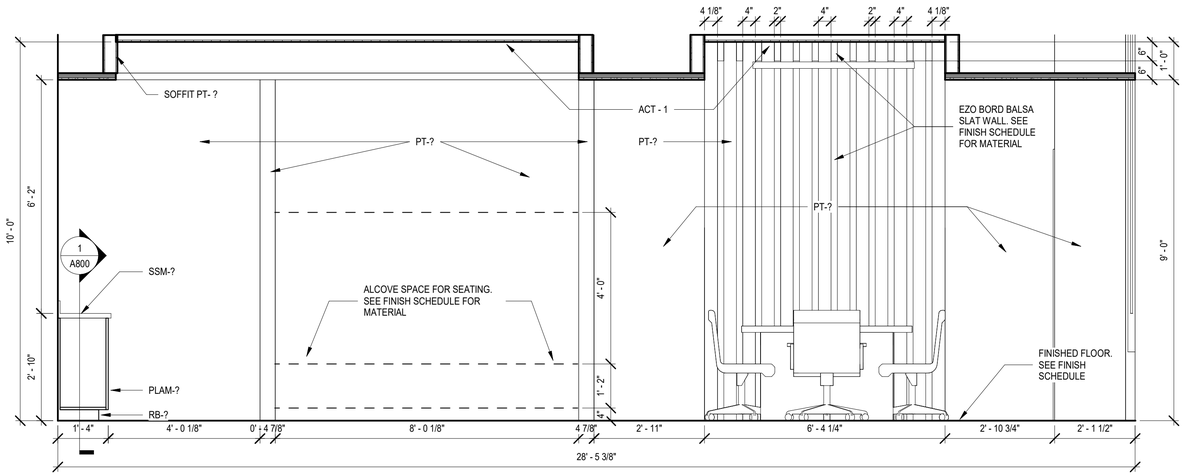

1 EXEC. CONF. RM 140 - NORTH ELEVATION
SCALE: 1/2" = 1'-0"

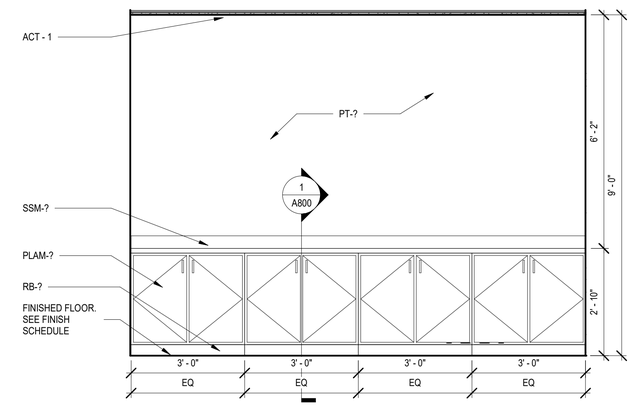

2 EXEC. CONF. ROOM 140 - WEST ELEVATION
SCALE: 1/2" = 1'-0"

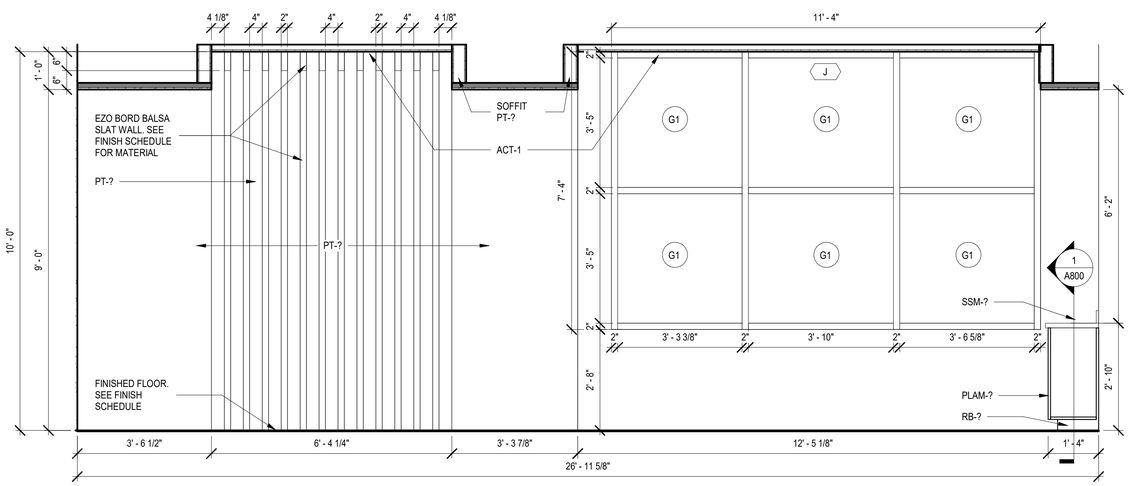

3 EXEC. CONF. RM 140 FT. WALL SOUTH ELEVATION
SCALE: 1/2" = 1'-0"

Brown AND Caldwell
BROWN AND CALDWELL
900 HAMMOND DRIVE, SUITE 500
ATLANTA, GA 30328
wendel

THIS DRAWING IS NOT VALID FOR CONSTRUCTION PURPOSES UNLESS IT BEARS THE SEAL AND SIGNATURE OF A DULY REGISTERED PROFESSIONAL

60% DESIGN

NCWSA
NEWTON COUNTY WATER & SEWERAGE AUTHORITY

NCWSA OFFICE ADDITION

REVISIONS

REV	DATE	DESCRIPTION

LINE IS 2 INCHES AT FULL SIZE

DESIGNED: MW4
DRAWN: LDG
CHECKED: DEK
CHECKED:
APPROVED: Approver

FILENAME

BC PROJECT NUMBER
616202
CLIENT PROJECT NUMBER

INTERIOR ELEVATIONS

DRAWING NUMBER
A601

Path: Autodesk Docs://NCWSA Admin Bldg_ V25/616202-NCWSA-ARCH_V25(Central).rvt
Plot Date: 3/24/2026 4:35:02 PM