KIRBY BUILDING SYSTEMS
A NUCOR COMPANY

PROJECT NUMBER:	K2F–25023 R1
PROJECT NAME:	Oconee Shop
PROJECT LOCATION:	Watkinsville, GA — COUNTY: Oconee
CUSTOMER:	Riddle Archictecture — Watkinsville, GA

MBMA MEMBER

IAS ACCREDITED AC 472

NOTES AND SPECIFICATIONS

BUILDING ERECTION NOTES

1) THE GENERAL CONTRACTOR AND/OR ERECTOR IS RESPONSIBLE TO SAFELY AND PROPERLY ERECT THE METAL BUILDING SYSTEM IN CONFORMANCE WITH THESE DRAWINGS, OSHA REQUIREMENTS, AND MBMA STANDARDS PERTAINING TO PROPER ERECTION. THIS INCLUDES, BUT IS NOT LIMITED TO, THE CORRECT USE OF TEMPORARY GUYS AND BRACING WHERE NEEDED FOR SQUARING, PLUMBING, AND SECURING THE STRUCTURAL AND SECONDARY FRAMING. SECONDARY WALL FRAMING MEMBERS (GIRTS OR BAR JOISTS) ARE NOT DESIGNED TO FUNCTION AS A WORK PLATFORM OR PROVIDE SAFETY TIE OFF ATTACHMENT IN ACCORDANCE WITH OSHA REQUIREMENTS. SECONDARY ROOF FRAMING MEMBERS (PURLINS OR BAR JOISTS) ARE NOT DESIGNED TO PROVIDE SAFETY TIE OFF ATTACHMENT IN ACCORDANCE WITH OSHA REQUIREMENTS.

2) ALL HIGH STRENGTH BOLTS ARE TYPE ASTM A325 AND ARE TO BE INSTALLED "SNUG–TIGHT" AS DEFINED BY THE APPLICABLE EDITION OF THE RCSC SPECIFICATION FOR STRUCTURAL JOINTS USING A325 OR A490 BOLTS, UNLESS NOTED OTHERWISE. ALSO, NOTE THAT BOLTS IN STANDARD HOLES DO NOT REQUIRE WASHERS PER THE RCSC SPECIFICATION FOR STRUCTURAL JOINTS USING A325 OR A490 BOLTS.

3) ALL A307 MACHINE BOLTS ARE TO BE BROUGHT TO A "SNUG TIGHT" CONDITION TO ENSURE THAT THE MATERIALS IN THE JOINT ARE BROUGHT INTO GOOD CONTACT WITH EACH OTHER.

4) WASHERS ARE REQUIRED AT ALL SLOTTED CONNECTIONS AS FOLLOWS:
=HOLE TO SLOT CONNECTION, ONE WASHER REQUIRED ON SLOTTED SIDE.
=SLOT TO SLOT CONNECTION, TWO WASHERS REQUIRED, ONE ON EACH SIDE OF THE CONNECTION. HOWEVER AT LAPPED ZEE MEMBERS, WHETHER PURLINS OR GIRTS, NO WASHERS ARE REQUIRED IN THE 8–BOLT LAPPED REGION.

5) THE METAL BUILDING SUPPLIER SHALL BE NOTIFIED PRIOR TO ANY FIELD MODIFICATIONS. MODIFICATIONS SHALL BE APPROVED BY THE METAL BUILDING SUPPLIER BEFORE WORK IS UNDERTAKEN.

6) ALL WELDING MUST BE PERFORMED BY AWS QUALIFIED WELDERS FOR THE WELDING PROCESSES AND POSITIONS INDICATED. ALL WORK MUST BE COMPLETED AND INSPECTED IN ACCORDANCE WITH THE APPLICABLE AWS SPECIFICATIONS. WELD ELECTRODES USED FOR THE SMAW (OR STICK) WELD PROCESS MUST BE 70 KSI STEEL AND LOW HYDROGEN CONTENT.

7) COMMON ABBREVIATIONS:	
a) TYP UNO–TYPICAL UNLESS NOTED OTHERWISE	f) SIM.–SIMILAR
b) SLV–SHORT LEG VERTICAL	g) NIC–NOT IN CONTRACT
c) LLV–LONG LEG VERTICAL	h) SL–STEEL LINE
d) NS & FS–NEAR SIDE AND FAR SIDE	i) N/A–NOT APPLICABLE
e) O.A.L.–OVERALL LENGTH	j) MBS–METAL BUILDING SUPPLIER

8) CONSTRUCTION LOADS SHALL NOT BE PLACED ON ANY STRUCTURAL STEEL FRAMEWORK UNLESS SUCH FRAMEWORK IS SAFELY BOLTED, WELDED, OR OTHERWISE ADEQUATELY SECURED.

9) PURLINS AND GIRTS SHALL NOT BE USED AS AN ANCHORAGE POINT FOR A FALL ARREST SYSTEM UNLESS WRITTEN APPROVAL IS OBTAINED FROM THE METAL BUILDING SUPPLIER.

10) PURLINS MAY ONLY BE USED AS A WALKING/WORKING SURFACE WHEN INSTALLING SAFETY SYSTEMS, AFTER ALL PERMANENT BRIDGING HAS BEEN INSTALLED AND FALL PROTECTION IS PROVIDED.

11) CONSTRUCTION LOADS MAY BE PLACED ONLY WITHIN A ZONE THAT IS WITHIN 8 FEET OF THE CENTER–LINE OF THE PRIMARY SUPPORT MEMBER. CFR BUNDLES SHOULD BE PLACED DIRECTLY OVER THE RIGID FRAMES.

12) ALL LIFTING DEVICES MUST MEET OSHA OR MSHA STANDARDS AND IN NO CASE IS IT ACCEPTABLE TO USE STRUCTURAL MEMBERS SUPPLIED BY THE MBS AS A SPREADER BAR OR LIFTING DEVICE.

GENERAL DESIGN NOTES AND MATERIAL SPECIFICATIONS

1) ALL STRUCTURAL STEEL SECTIONS AND WELDED PLATE MEMBERS ARE DESIGNED IN ACCORDANCE WITH THE AISC "SPECIFICATIONS FOR STRUCTURAL STEEL BUILDINGS–ALLOWABLE STRESS DESIGN", NINTH EDITION, OR THE AISC "SPECIFICATIONS FOR STRUCTURAL STEEL BUILDINGS", THIRTEENTH EDITION, AS REQUIRED BY THE SPECIFIED BUILDING CODE.

2) ALL WELDING OF STRUCTURAL STEEL IS BASED ON AWS D1.1 "STRUCTURAL WELDING CODE", LATEST EDITION.

3) ALL COLD FORMED MEMBERS ARE DESIGNED IN ACCORDANCE WITH AISI "SPECIFICATIONS FOR THE DESIGN OF COLD FORMED STEEL STRUCTURAL MEMBERS", LATEST EDITION.

4) ALL WELDING OF COLD FORMED STEEL IS BASED ON AWS D1.3 "STRUCTURAL WELDING CODE – SHEET STEEL", LATEST EDITION.

5) IF JOISTS ARE INCLUDED WITH THIS PROJECT, THEY ARE SUPPLIED AS A PART OF THE SYSTEMS–ENGINEERED METAL BUILDING AND ARE FABRICATED IN ACCORDANCE WITH THE REQUIREMENTS OF SECTION 1926.758 OF THE OSHA SAFETY STANDARD FOR STEEL ERECTION, DATED JANUARY 18, 2001.

6) MATERIAL SPECIFICATIONS:

PLATE AND FLANGE MATERIAL:	
5"–12" WIDE & THRU 1" THICK	A529, GRADE 55
OTHERS	A572 GRADE 50 OR A36
BUILT–UP STRUCTURAL WEB MATERIAL	A1011 SS (OR HSLAS CL1) GR 55
HOT–ROLLED STRUCTURAL	A36 OR A572 GRADE 50 OR A992 GRADE 50
STRUCTURAL TUBE	A500 GRADE C (46 KSI)
STRUCTURAL PIPE	A500 GRADE B (42 KSI)
COLD–FORMED STRUCTURAL	A1011 OR A1039 SS (OR HSLAS CL1) GR 55
RPB ROOF PANELS	A792 GRADE 80
STANDING SEAM ROOF PANELS	A792 GRADE 50, CLASS 1
R–PANEL AND A–PANEL SIDING	A653 GRADE 80, CLASS 1 OR A792 GRADE 80, CLASS 1
ROD BRACING	A529 GRADE 50
CABLE BRACING	A475 COATING CLASS A, GRADE EHS, 7–WIRE
WELDS	AWS D1.1 LATEST EDITION
HIGH–STRENGTH BOLTS	A325 TYPE 1 HEAVY HEX OR A490 TYPE 1 HEAVY HEX
MACHINE BOLTS	A–307 GRADE A HEX

PROJECT LOADS

DESIGN CODE: IBC 2024 — BUILDING END USE: 4E

ROOF LIVE LOAD: 20 PSF — MBMA OCC. CLASS: II – Standard Buildings

GROUND SNOW LOAD: 15 PSF — SNOW EXP. FACTOR, Ce: 1

SNOW IMPORTANCE FACTOR, Is: 1

WIND: 106 — WIND IMPORTANCE FACTOR, Iw:

EXPOSURE: C — WITHIN HURRICANE COASTLINE ☐ YES ☒ NO

UL 90 ☐ YES ☒ NO — RAIN INTENSITY (in/hr) 7

SEISMIC INFORMATION Ss:0.27, S1:0.093

Design Sds/Sd1: — Site Class: D

Seismic Imp. Factor Ie: 1 — Seismic Design Category:

Analysis Procedure: Equivalent Lateral Force Method

Basic SFRS:

NOTES:

1) COLLATERAL DEAD LOADS, UNLESS OTHERWISE NOTED, ARE ASSUMED TO BE UNIFORMLY DISTRIBUTED. WHEN SUSPENDED SPRINKLER SYSTEMS, LIGHTING, HVAC EQUIPMENT, CEILINGS, ETC., ARE SUSPENDED FROM ROOF MEMBERS, CONSULT THE M.B.S. IF THESE CONCENTRATED LOADS EXCEED 200 POUNDS, OR IF INDIVIDUAL MEMBERS ARE LOADED SIGNIFICANTLY MORE THAN OTHERS.

2) THE DESIGN OF STRUCTURAL MEMBERS SUPPORTING GRAVITY LOADS IS CONTROLLED BY THE MORE CRITICAL EFFECT OF ROOF LIVE LOAD OR ROOF SNOW LOAD, AS DETERMINED BY THE APPLICABLE CODE.

BUILDING	New
ROOF DEAD (PSF):	3
PRI. COL. (PSF):	3
SEC. COL. (PSF):	3
SNOW Ct:	1
SNOW Cs:	
ROOF SNOW (PSF):	12.6
WIND ENCLOSURE:	Enclosed
GCpi:	
SEISMIC R:	
SEISMIC Cs:	
BASE SHEAR (KIPS):	

KIRBY BUILDING SYSTEMS A NUCOR COMPANY

Drawing Generated By eQuote

PROJECT NAME: OCONEE SHOP WATKINSVILLE, GA

CUSTOMER NAME: RIDDLE ARCHICTECTURE WATKINSVILLE, GA

DO NOT USE FOR FINAL CONSTRUCTION

7/15/2026 9:01 AM

SHEET TITLE: PRELIMINARY COVERSHEET DRAWING

SHEET NUMBER: C1

QUOTE NUMBER: K2F–25023 R1

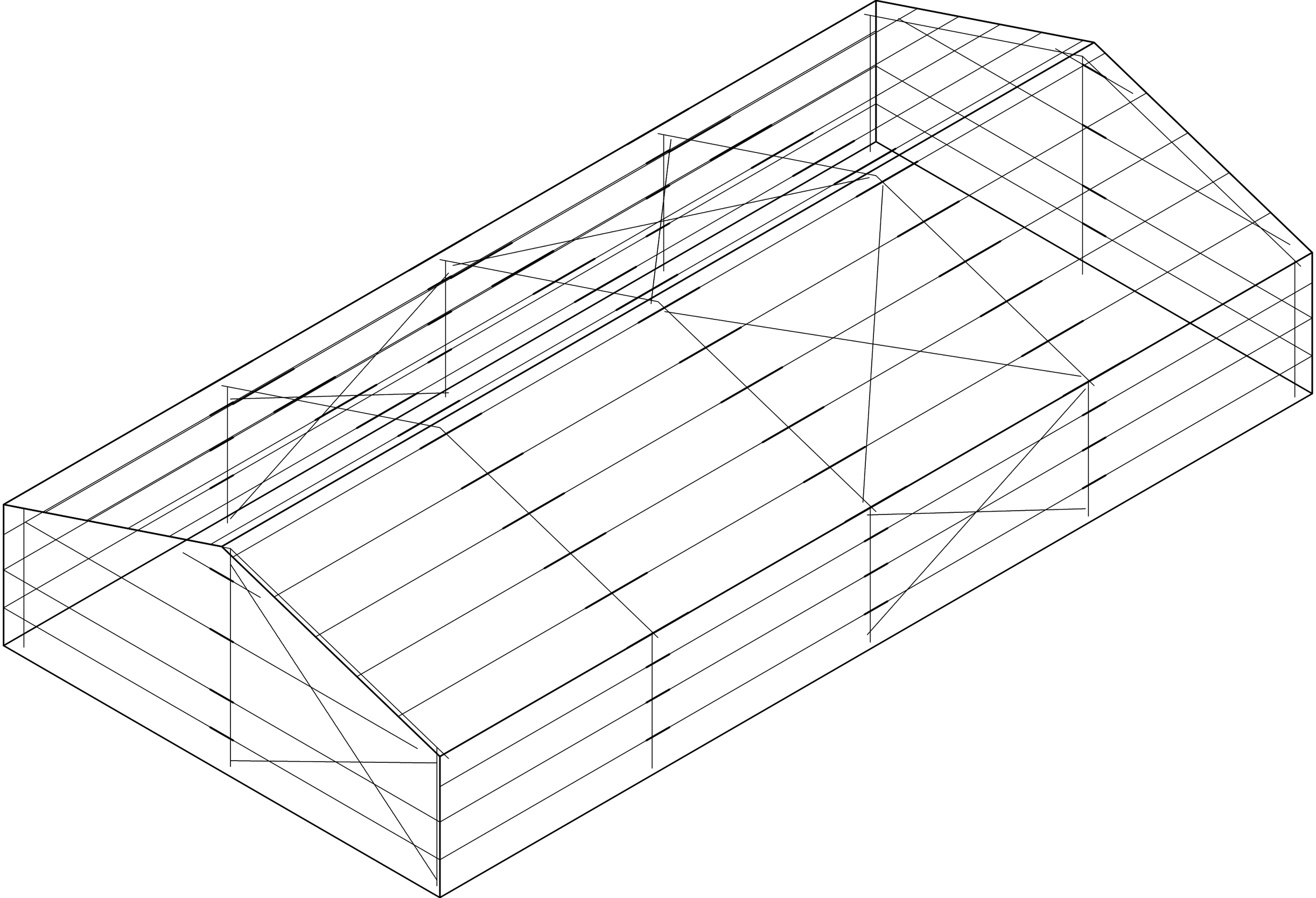

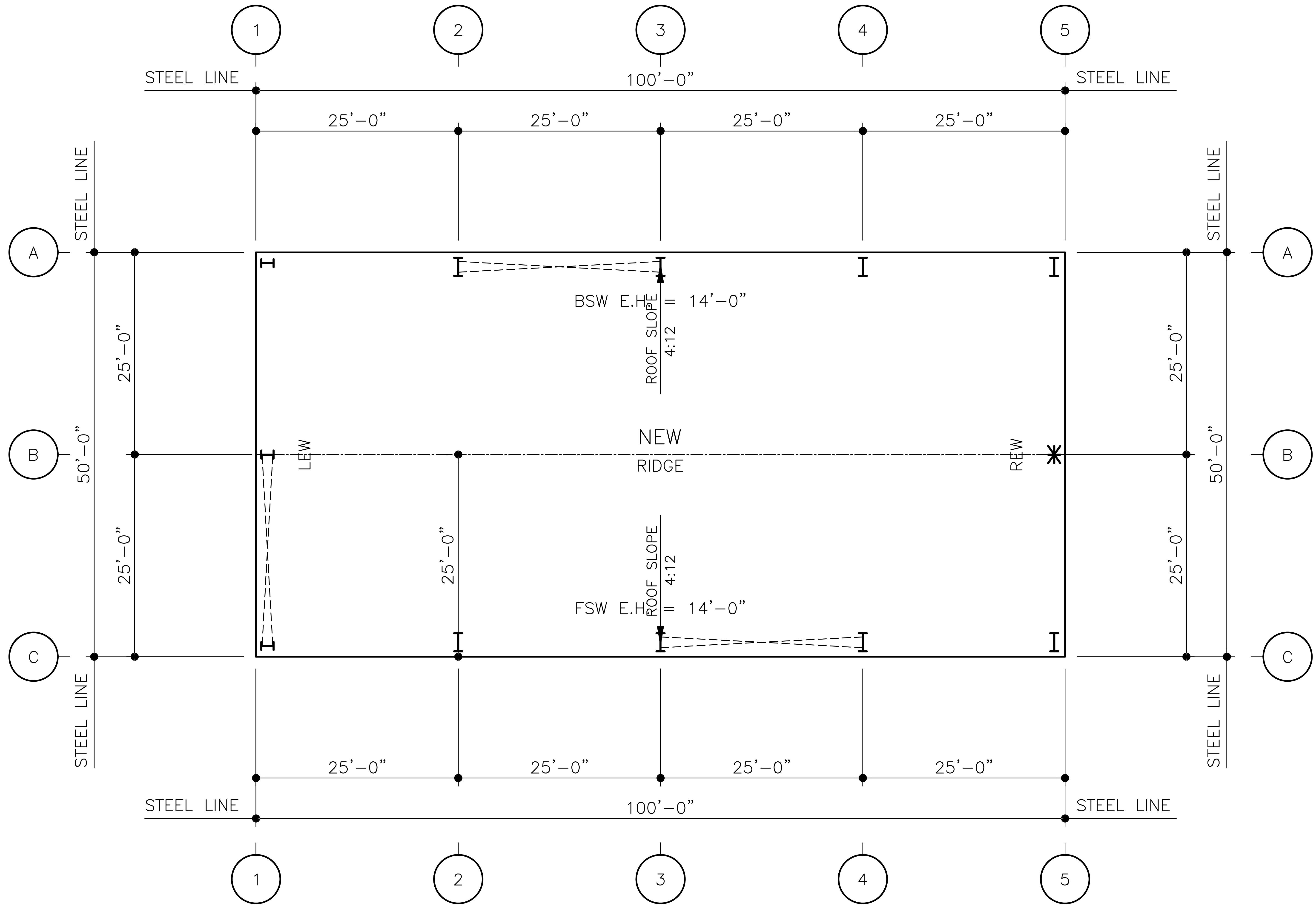

Column locations marked with "*" are designated as Most Economical (Pipe, Tube, or I–Shape) and will be determined at final design.

DO NOT USE FOR FINAL CONSTRUCTION

PROJECT NAME:
OCONEE SHOP
WATKINSVILLE, GA

CUSTOMER NAME:
RIDDLE ARCHICTECTURE
WATKINSVILLE, GA

7/15/2026 9:01 AM

SHEET TITLE:
PRELIMINARY FLOOR PLAN

QUOTE NUMBER:
K2F–25023 R1

SHEET NUMBER:
FP1

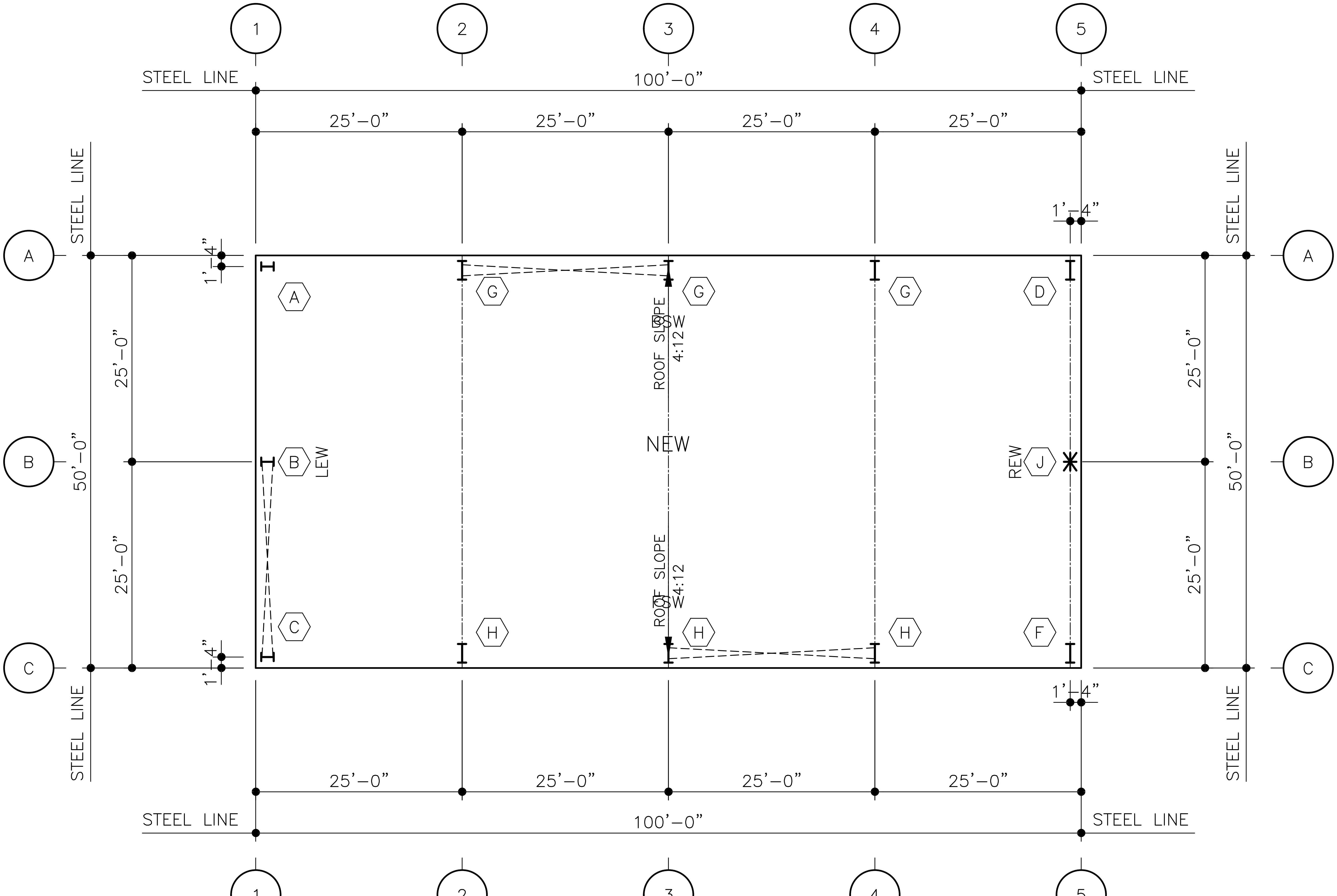

Finish floor elevation assumed to be 100'–0" unless noted otherwise.
Column locations marked with "*" are designated as Most Economical (Pipe, Tube, or I–Shape) and will be determined at final design.

DO NOT USE FOR FINAL CONSTRUCTION

PROJECT NAME: OCONEE SHOP
WATKINSVILLE, GA

CUSTOMER NAME: RIDDLE ARCHICTECTURE
WATKINSVILLE, GA

SHEET TITLE: PRELIMINARY ANCHOR BOLT PLAN
7/15/2026 9:01 AM

QUOTE NUMBER: K2F–25023 R1

SHEET NUMBER: AB1

KIRBY BUILDING SYSTEMS
A NUCOR COMPANY

Drawing Generated By eQuote

ANCHOR BOLT PLAN

GENERAL NOTES

1. THE SPECIFIED ANCHOR ROD DIAMETER ASSUMES F1554 GRADE 36 UNLESS NOTED OTHERWISE. ANCHOR ROD MATERIAL OF EQUAL DIAMETER MEETING OR EXCEEDING THE STRENGTH REQUIREMENTS SET FORTH ON THESE DRAWINGS MAY BE UTILIZED AT THE DISCRETION OF THE FOUNDATION DESIGN ENGINEER. ANCHOR ROD EMBEDMENT LENGTH SHALL BE DETERMINED BY THE FOUNDATION DESIGN ENGINEER.
2. KIRBY BUILDING SYSTEMS IS NOT RESPONSIBLE FOR PROJECT FOUNDATION DESIGN. THE FOUNDATION DESIGN IS THE RESPONSIBILITY OF A REGISTERED PROFESSIONAL ENGINEER, FAMILIAR WITH LOCAL SITE CONDITIONS.
3. ALL ANCHOR RODS, FLAT WASHERS FOR ANCHOR RODS, EXPANSION BOLTS, AS WELL AS ALL CONCRETE/MASONRY EMBED PLATES ARE NOT BY KIRBY BUILDING SYSTEMS.
4. THIS DRAWING IS NOT TO SCALE.
5. FINISHED FLOOR ELEVATION = 100'-0" UNLESS NOTED OTHERWISE.
6. "SINGLE" CEE COLUMNS SHALL BE ORIENTED WITH THE "TOES" TOWARD THE LOW EAVE UNLESS NOTED OTHERWISE.

KBSNOTE

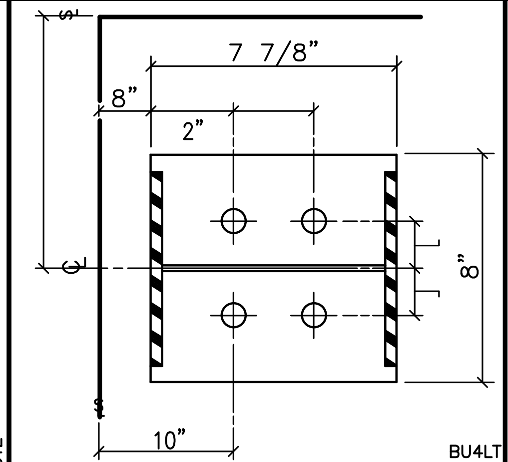

A (4) 3/4" ø ANCHOR BOLTS WITH A 3" PROJECTION

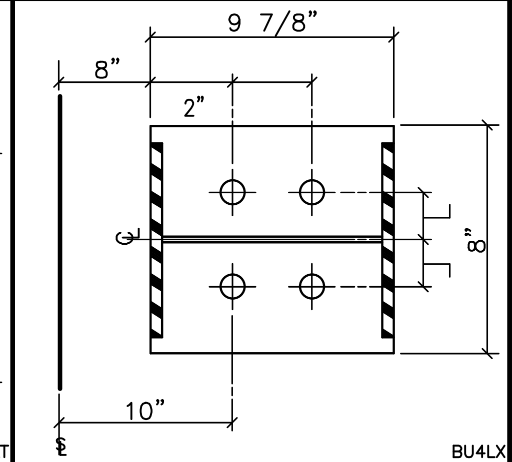

B (4) 3/4" ø ANCHOR BOLTS WITH A 3" PROJECTION

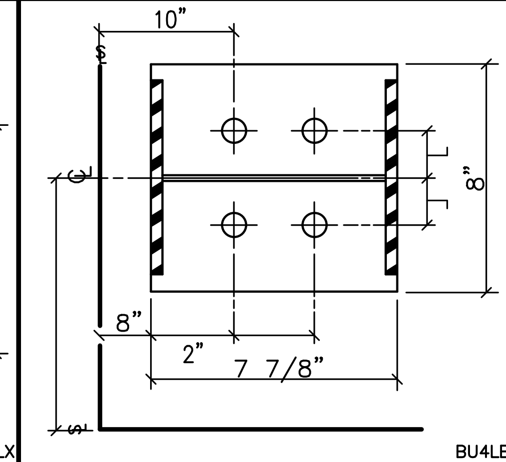

C (4) 3/4" ø ANCHOR BOLTS WITH A 3" PROJECTION

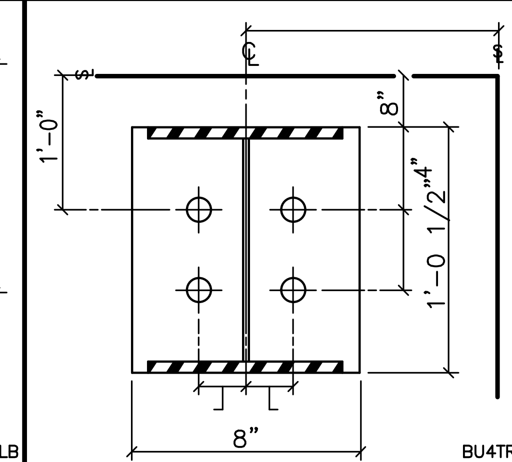

D (4) 3/4" ø ANCHOR BOLTS WITH A 3" PROJECTION

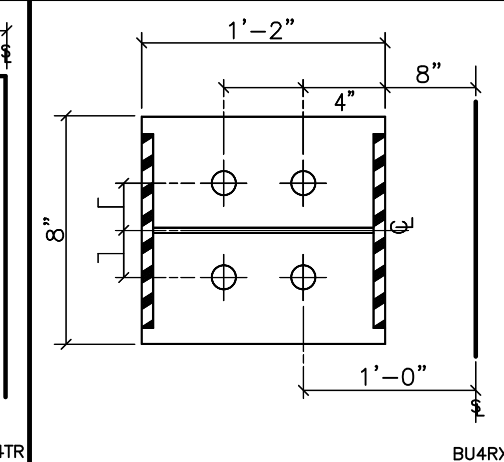

E (4) 3/4" ø ANCHOR BOLTS WITH A 3" PROJECTION

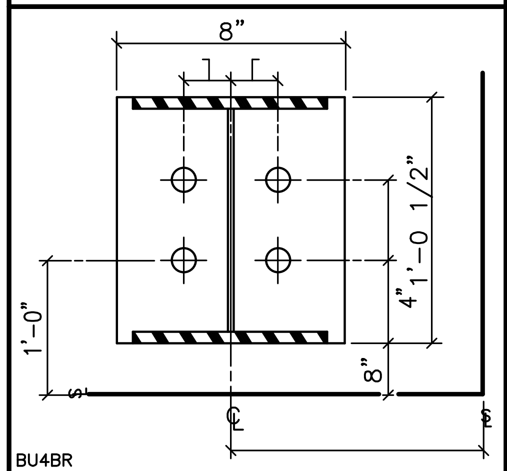

F (4) 3/4" ø ANCHOR BOLTS WITH A 3" PROJECTION

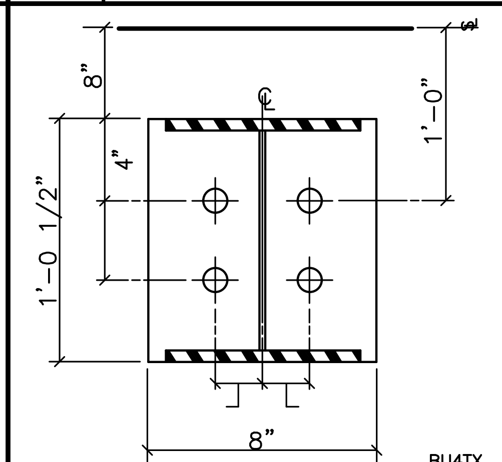

G (4) 3/4" ø ANCHOR BOLTS WITH A 3" PROJECTION

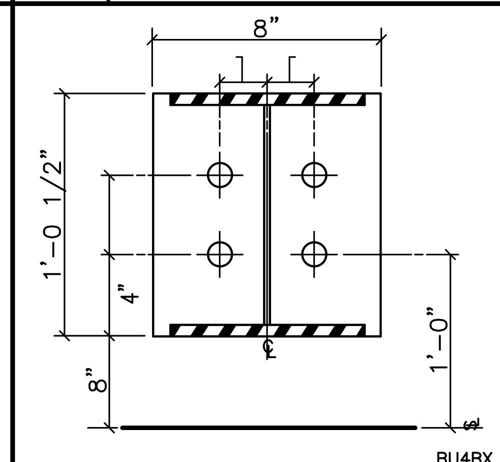

H (4) 3/4" ø ANCHOR BOLTS WITH A 3" PROJECTION

KIRBY BUILDING SYSTEMS
A NUCOR COMPANY
Drawing Generated By eQuote

PROJECT NAME:
OCONEE SHOP
WATKINSVILLE, GA

CUSTOMER NAME:
RIDDLE ARCHICTECTURE
WATKINSVILLE, GA

DO NOT USE FOR FINAL CONSTRUCTION

7/15/2026 9:01 AM

SHEET TITLE:
PRELIMINARY ANCHOR BOLT DETAILS

QUOTE NUMBER:
K2F-25023 R1

SHEET NUMBER:
AB1 OF 1

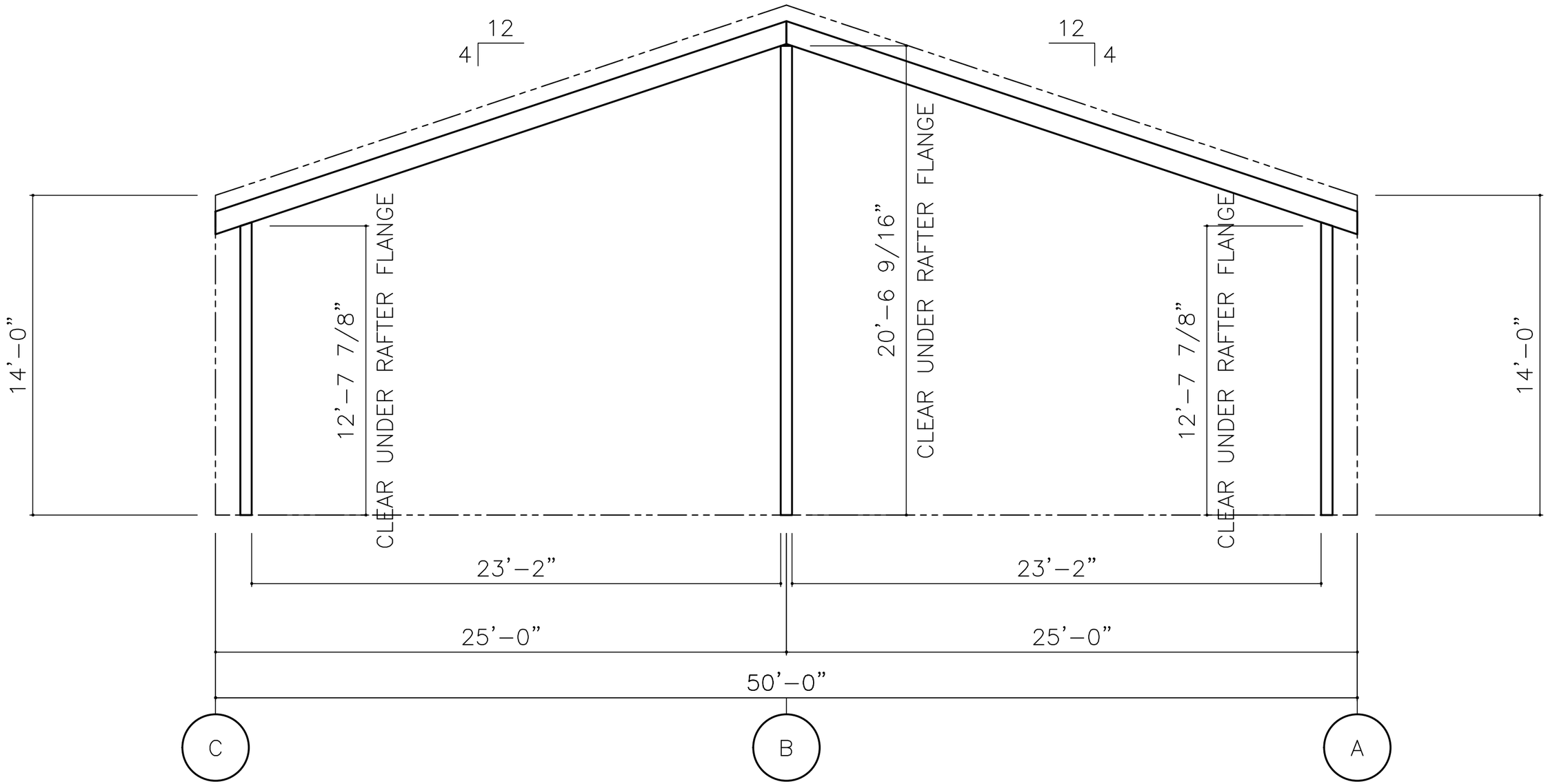

NEW – FRAME @ LINE(S) 1

*ALL CLEAR DIMENSIONS ARE SUBJECT TO CHANGE AT TIME OF FINAL DESIGN, UNLESS NOTED OTHERWISE IN THE SPECIAL USER NOTES SECTION.

KIRBY BUILDING SYSTEMS
A RUSSER COMPANY
Drawing Generated By eQuote

PROJECT NAME: OCONEE SHOP
WATKINSVILLE, GA
CUSTOMER NAME: RIDDLE ARCHITECTURE
WATKINSVILLE, GA

DO NOT USE FOR FINAL CONSTRUCTION

7/15/2026 9:02 AM

SHEET TITLE: PRELIMINARY FRAME CROSS SECTIONS

SHEET NUMBER: FX

QUOTE NUMBER: K2F–25023 R1

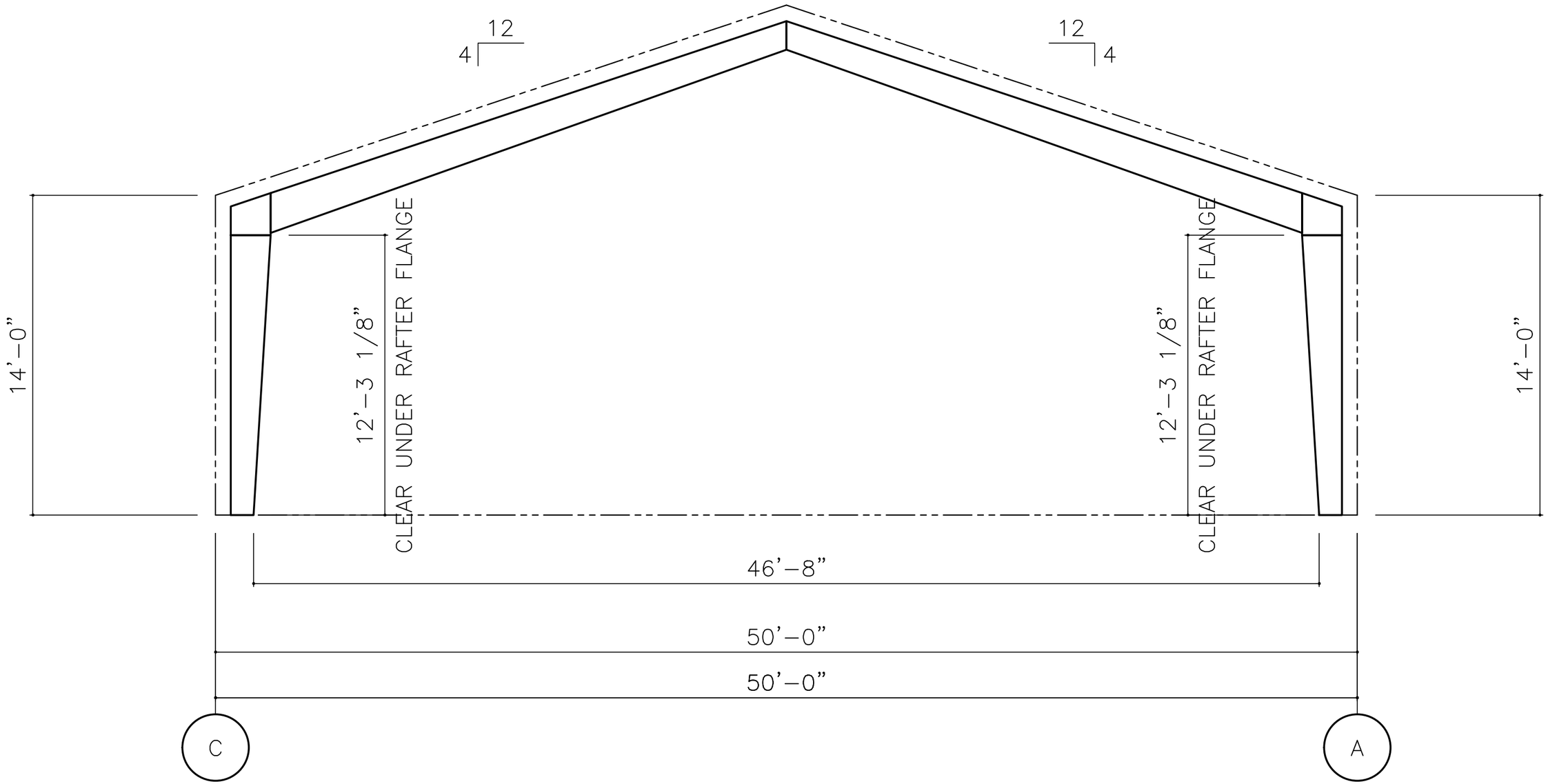

NEW – FRAME @ LINE(S) 2–4

*ALL CLEAR DIMENSIONS ARE SUBJECT TO CHANGE AT TIME OF FINAL DESIGN, UNLESS NOTED OTHERWISE IN THE SPECIAL USER NOTES SECTION.

KIRBY BUILDING SYSTEMS
A RUSSER COMPANY
Drawing Generated By eQuote

PROJECT NAME: OCONEE SHOP
WATKINSVILLE, GA
CUSTOMER NAME: RIDDLE ARCHITECTURE
WATKINSVILLE, GA

DO NOT USE FOR FINAL CONSTRUCTION

7/15/2026 9:02 AM

SHEET TITLE: PRELIMINARY FRAME CROSS SECTIONS

SHEET NUMBER: FX

QUOTE NUMBER: K2F-25023 R1

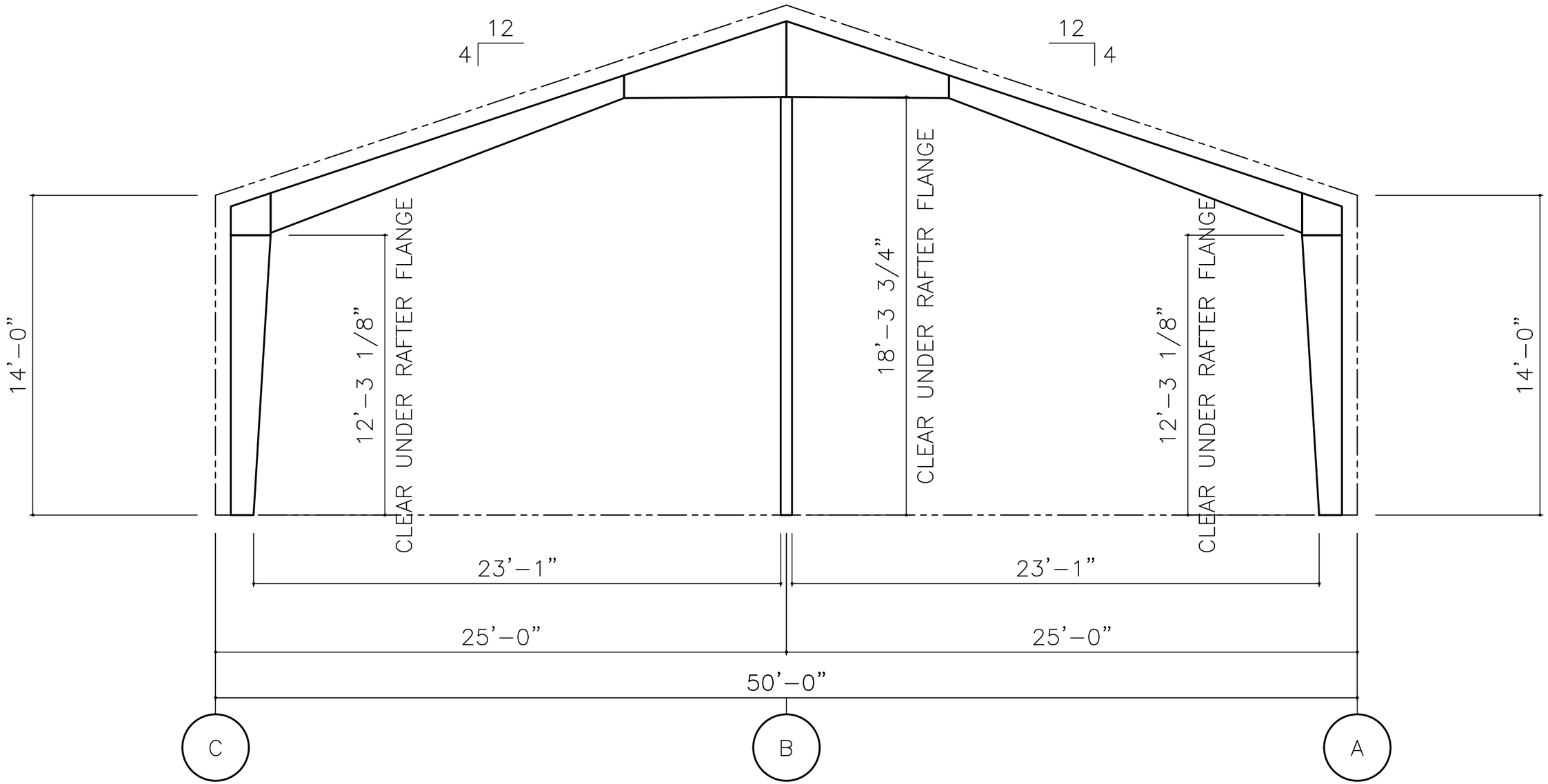

NEW – FRAME @ LINE(S) 5

*ALL CLEAR DIMENSIONS ARE SUBJECT TO CHANGE AT TIME OF FINAL DESIGN, UNLESS NOTED OTHERWISE IN THE SPECIAL USER NOTES SECTION.

KIRBY BUILDING SYSTEMS
A RUSCO COMPANY
Drawing Generated By eQuote

PROJECT NAME: OCONEE SHOP
WATKINSVILLE, GA
CUSTOMER NAME: RIDDLE ARCHITECTURE
WATKINSVILLE, GA

DO NOT USE FOR FINAL CONSTRUCTION

7/15/2026 9:02 AM

SHEET TITLE: PRELIMINARY FRAME CROSS SECTIONS
SHEET NUMBER: FX
QUOTE NUMBER: K2F-25023 R1

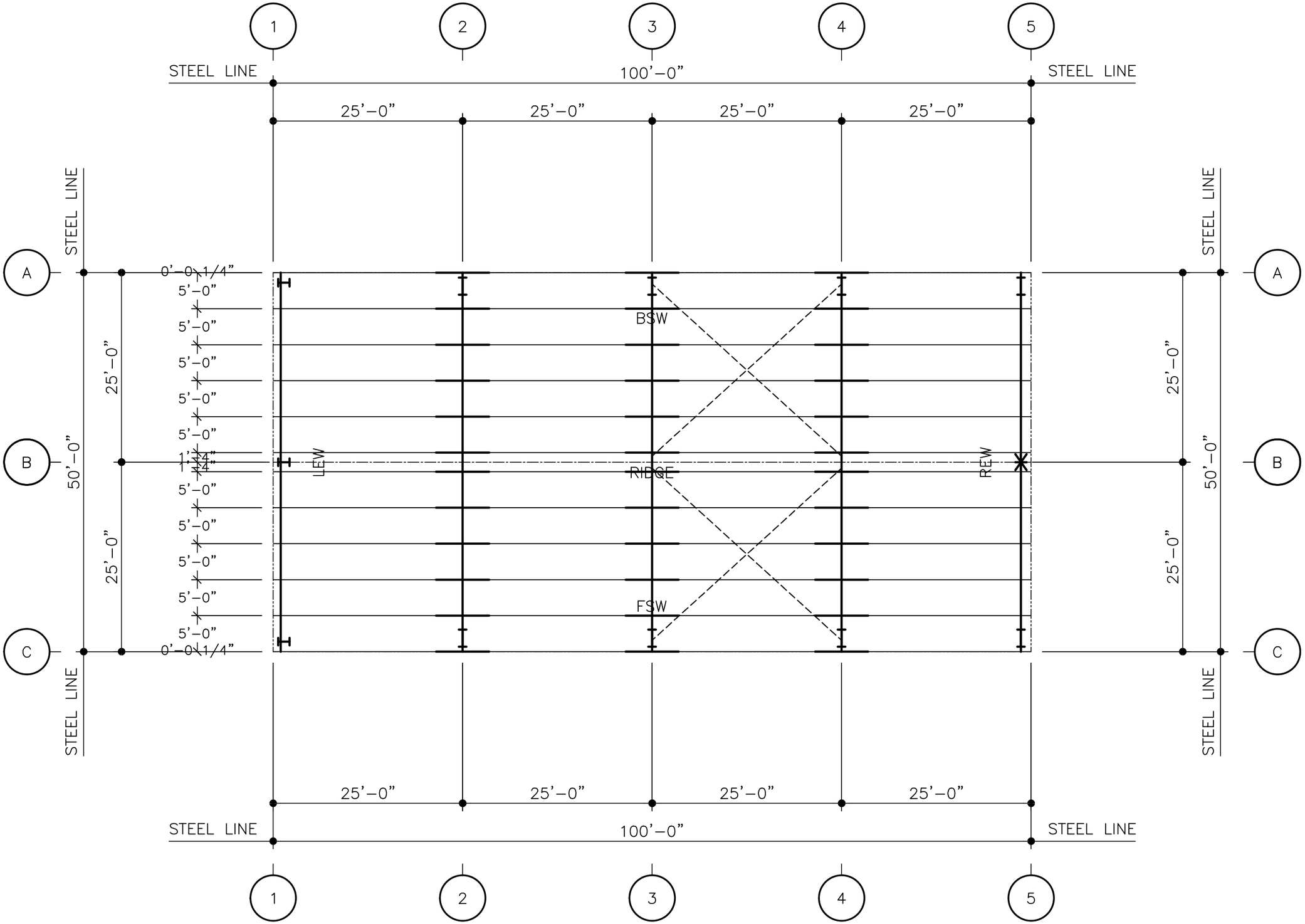

NEW ROOF FRAMING PLAN

Column locations marked with "*" are designated as Most Economical (Pipe, Tube, or I-Shape) and will be determined at final design.

KIRBY BUILDING SYSTEMS
A RUSSER COMPANY
Drawing Generated By eQuote

PROJECT NAME: OCONEE SHOP
WATKINSVILLE, GA
CUSTOMER NAME: RIDDLE ARCHICTECTURE
WATKINSVILLE, GA

DO NOT USE FOR FINAL CONSTRUCTION

7/15/2026 9:02 AM

SHEET TITLE: PRELIMINARY ROOF FRAMING PLAN
QUOTE NUMBER: K2F-25023 R1
SHEET NUMBER: RF1

KEY PLAN

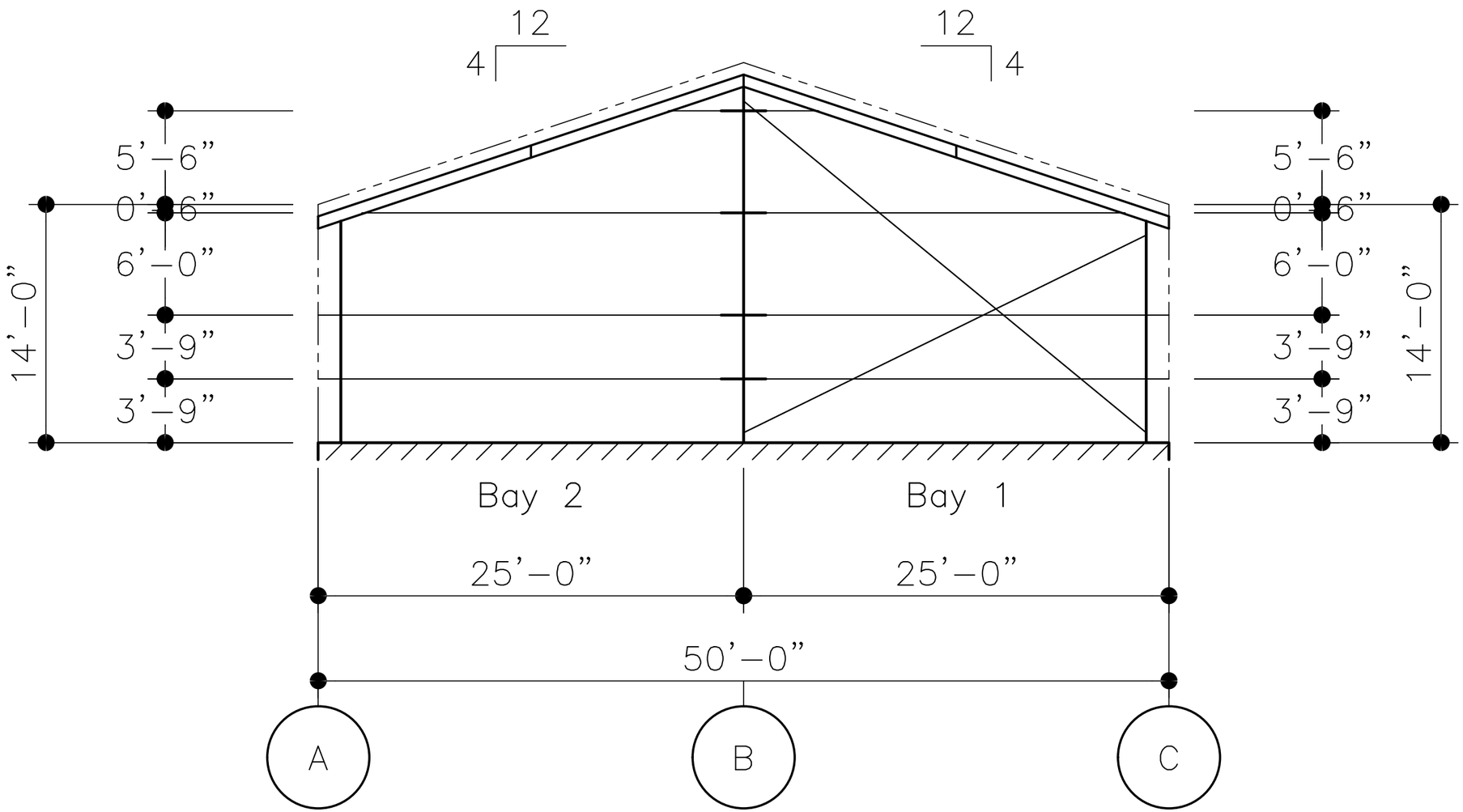

ELEVATION AT LINE 1

KIRBY BUILDING SYSTEMS
A RUSSER COMPANY

Drawing Generated By eQuote

PROJECT NAME: OCONEE SHOP
WATKINSVILLE, GA

CUSTOMER NAME: RIDDLE ARCHITECTURE
WATKINSVILLE, GA

DO NOT USE FOR FINAL CONSTRUCTION

7/15/2026 9:02 AM

SHEET TITLE: PRELIMINARY STRUCTURAL ELEVATIONS

QUOTE NUMBER: K2F-25023 R1

SHEET NUMBER: ST5

KEY PLAN

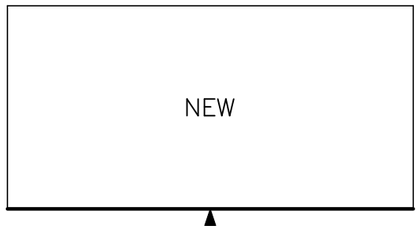

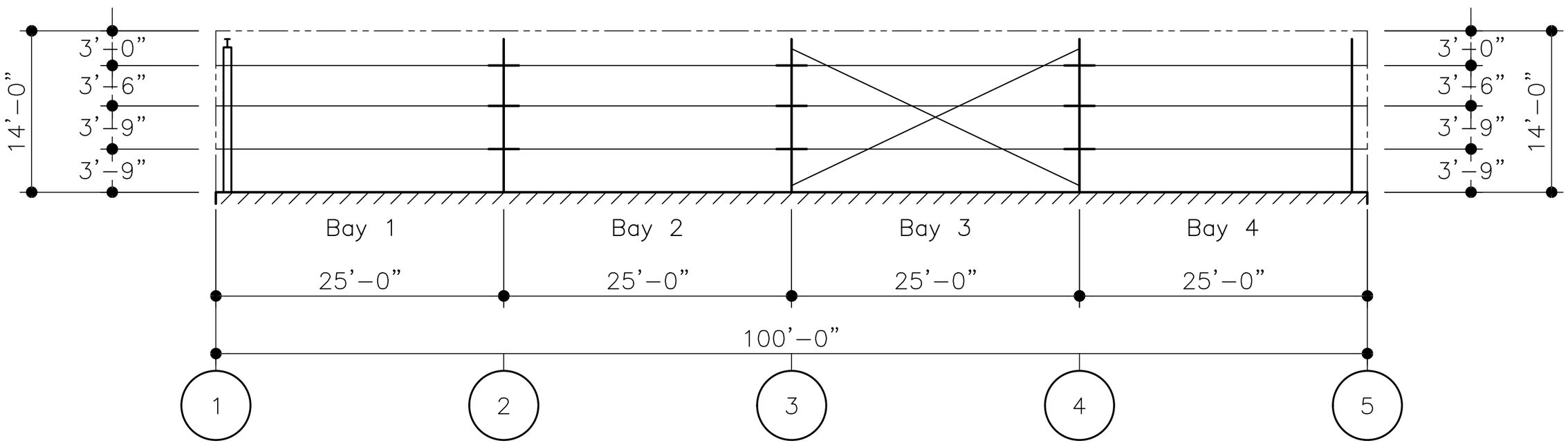

ELEVATION AT LINE C

KIRBY BUILDING SYSTEMS
A RUSSER COMPANY
Drawing Generated By eQuote

PROJECT NAME:
OCONEE SHOP
WATKINSVILLE, GA

CUSTOMER NAME:
RIDDLE ARCHICTECTURE
WATKINSVILLE, GA

DO NOT USE FOR FINAL CONSTRUCTION

7/15/2026 9:02 AM

SHEET TITLE:
PRELIMINARY STRUCTURAL ELEVATIONS

SHEET NUMBER:
ST6

QUOTE NUMBER:
K2F-25023 R1

KEY PLAN

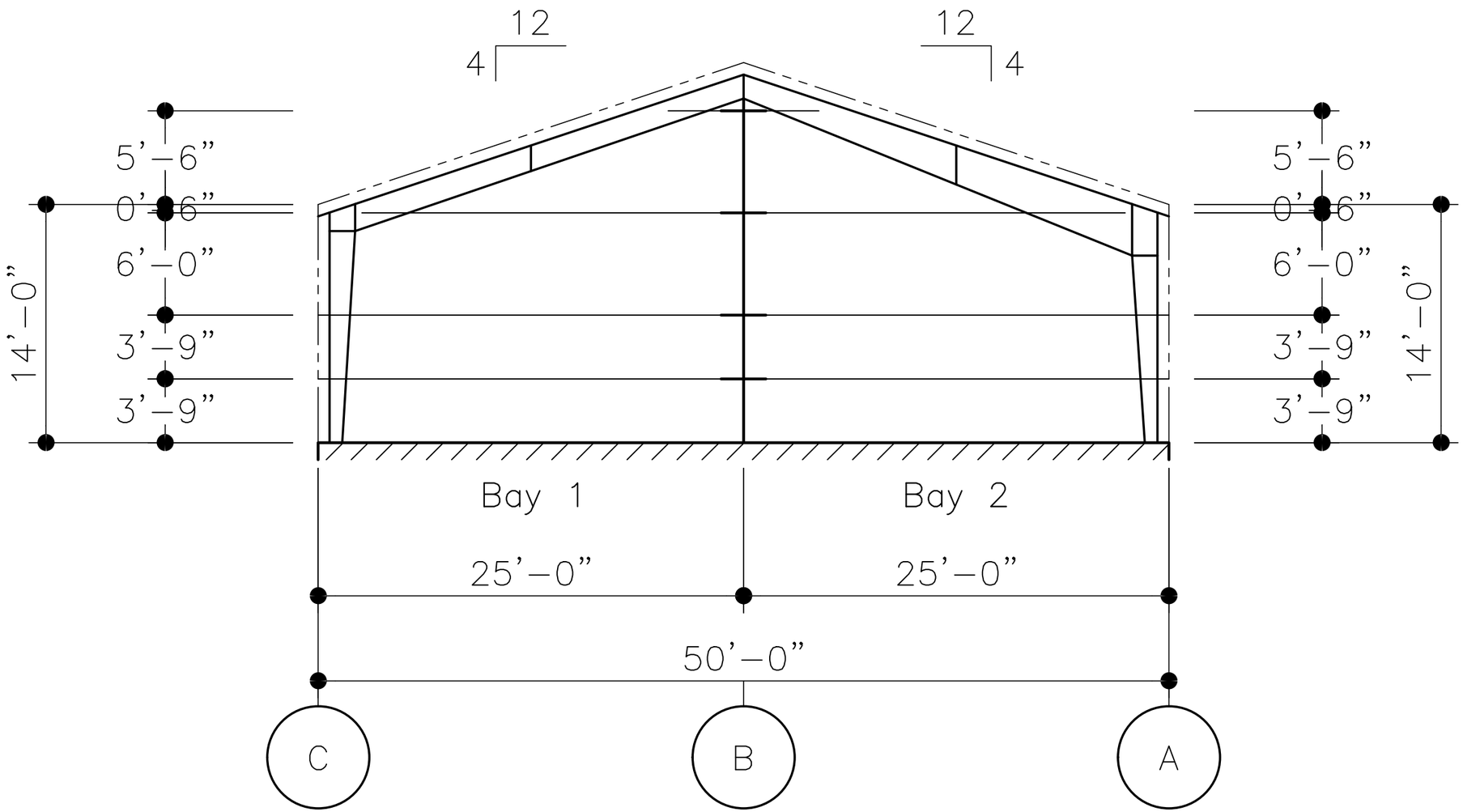

ELEVATION AT LINE 5

KIRBY BUILDING SYSTEMS
A RUSSER COMPANY
Drawing Generated By eQuote

PROJECT NAME: OCONEE SHOP
WATKINSVILLE, GA
CUSTOMER NAME: RIDDLE ARCHITECTURE
WATKINSVILLE, GA

DO NOT USE FOR FINAL CONSTRUCTION

7/15/2026 9:02 AM

SHEET TITLE: PRELIMINARY STRUCTURAL ELEVATIONS

QUOTE NUMBER: K2F-25023 R1

SHEET NUMBER: ST7

KEY PLAN

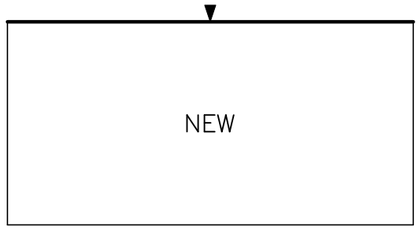

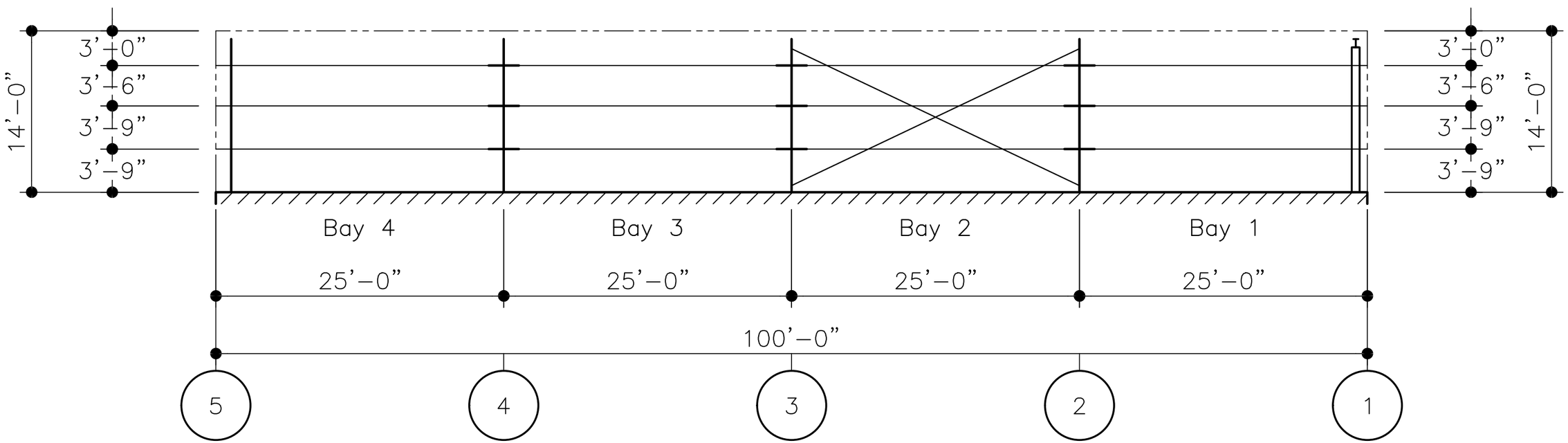

ELEVATION AT LINE A

KIRBY BUILDING SYSTEMS
A RUSSER COMPANY

Drawing Generated By eQuote

PROJECT NAME:
OCONEE SHOP
WATKINSVILLE, GA

CUSTOMER NAME:
RIDDLE ARCHICTECTURE
WATKINSVILLE, GA

DO NOT USE FOR FINAL CONSTRUCTION

7/15/2026 9:02 AM

SHEET TITLE:
PRELIMINARY STRUCTURAL ELEVATIONS

QUOTE NUMBER:
K2F-25023 R1

SHEET NUMBER:
ST8

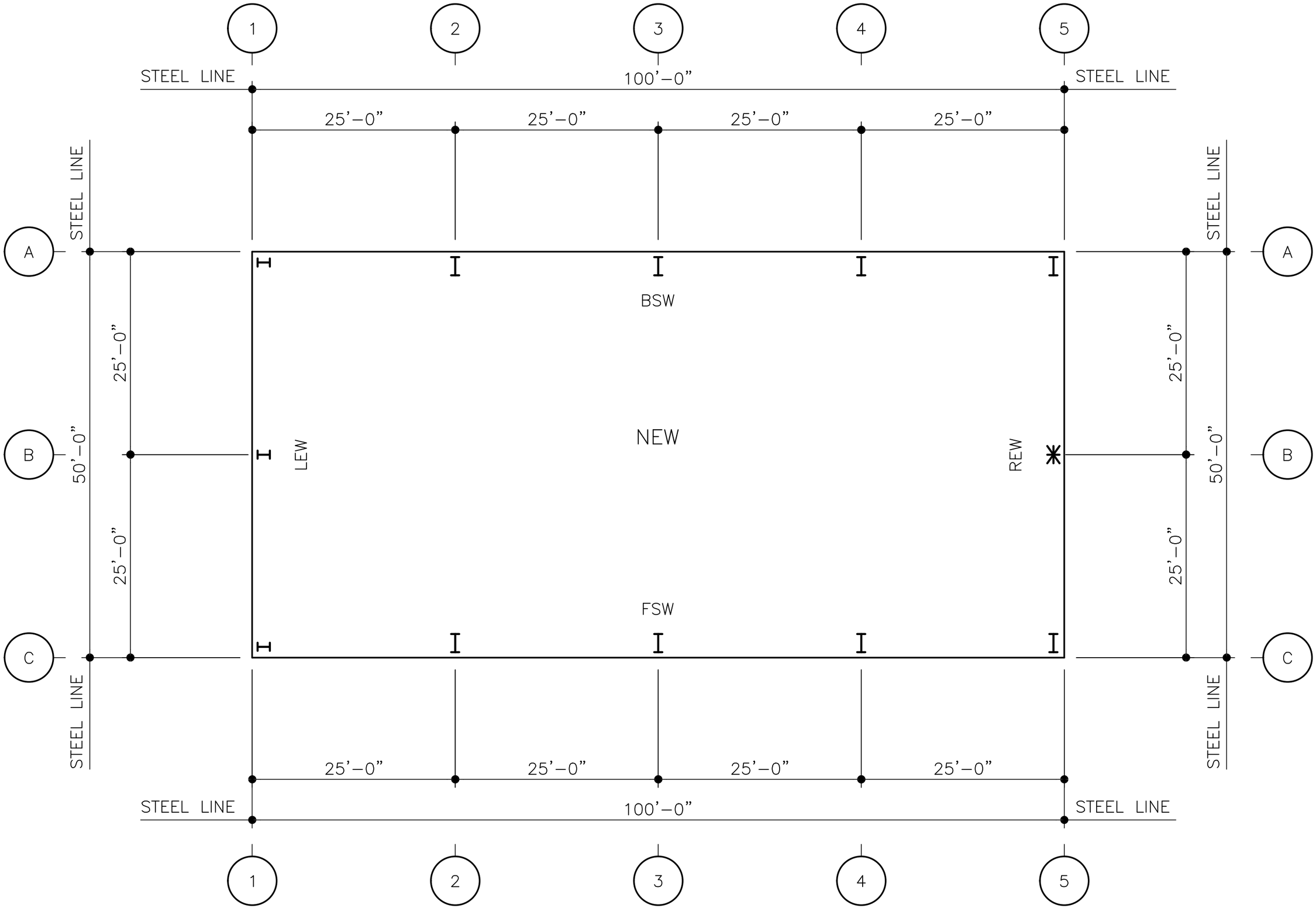

Column locations marked with "*" are designated as Most Economical (Pipe, Tube, or I-Shape) and will be determined at final design.

KIRBY BUILDING SYSTEMS
A RUDDER COMPANY
Drawing Generated By eQuote

PROJECT NAME:
OCONEE SHOP
WATKINSVILLE, GA

CUSTOMER NAME:
RIDDLE ARCHICTECTURE
WATKINSVILLE, GA

DO NOT USE FOR FINAL CONSTRUCTION

7/15/2026 9:02 AM

SHEET TITLE:
PRELIMINARY CRANE PLAN

QUOTE NUMBER:
K2F-25023 R1

SHEET NUMBER:
CP1

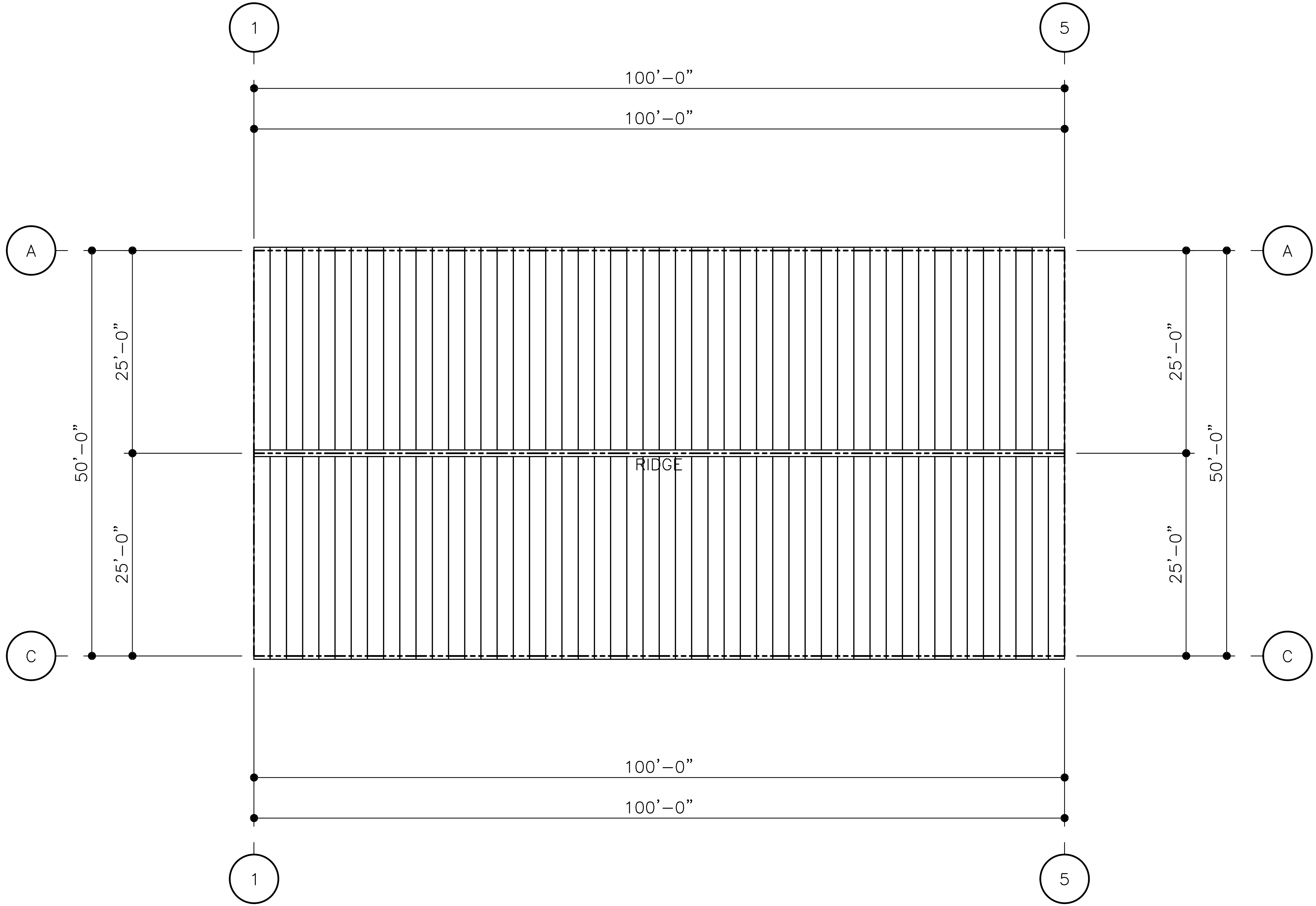

ROOF SHEETING PLAN

NEW – PANELS: 24 GA. SS3 – TO BE SELECTED (PVDF)

PROJECT NAME: OCONEE SHOP
WATKINSVILLE, GA

CUSTOMER NAME: RIDDLE ARCHITECTURE
WATKINSVILLE, GA

DO NOT USE FOR FINAL CONSTRUCTION

7/15/2026 9:02 AM

SHEET TITLE: PRELIMINARY ROOF SHEETING PLAN

QUOTE NUMBER: K2F-25023 R1

SHEET NUMBER: RS1

KEY PLAN

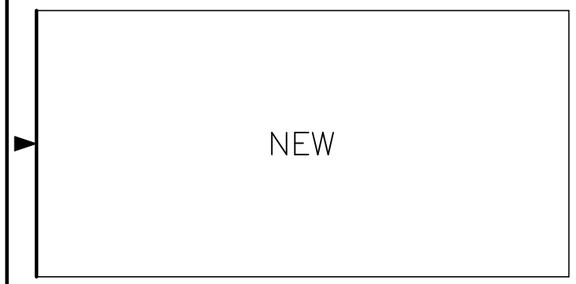

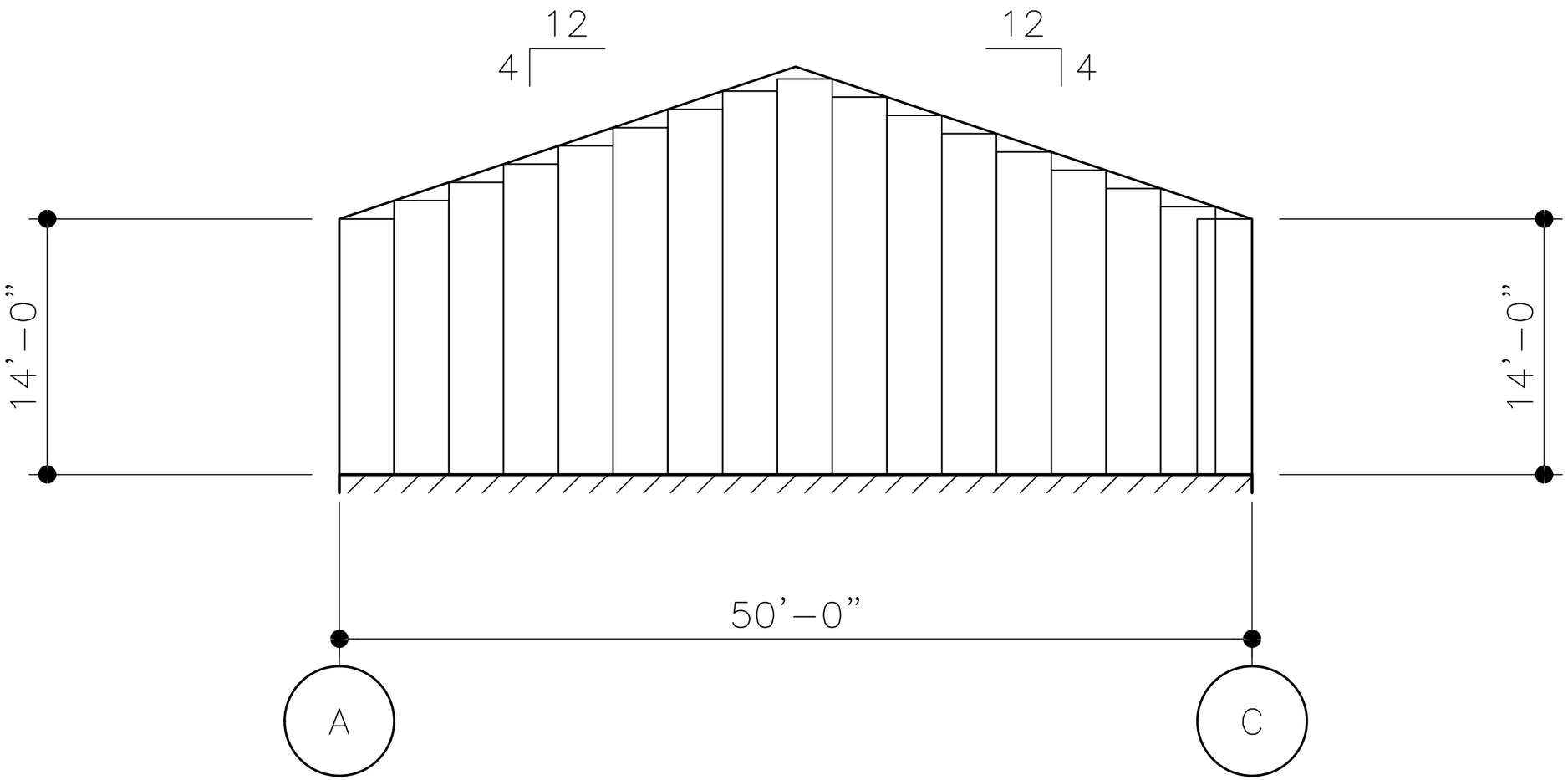

WALL SHEETING ELEVATION AT LINE 1

PANELS: 26 GA. R–PANEL – TO BE SELECTED (PVDF)

KIRBY BUILDING SYSTEMS
A RUSSER COMPANY
Drawing Generated By eQuote

PROJECT NAME: OCONEE SHOP
WATKINSVILLE, GA
CUSTOMER NAME: RIDDLE ARCHICTECTURE
WATKINSVILLE, GA

DO NOT USE FOR FINAL CONSTRUCTION

7/15/2026 9:02 AM

SHEET TITLE: PRELIMINARY SHEETING ELEVATIONS
SHEET NUMBER: WS5
QUOTE NUMBER: K2F–25023 R1

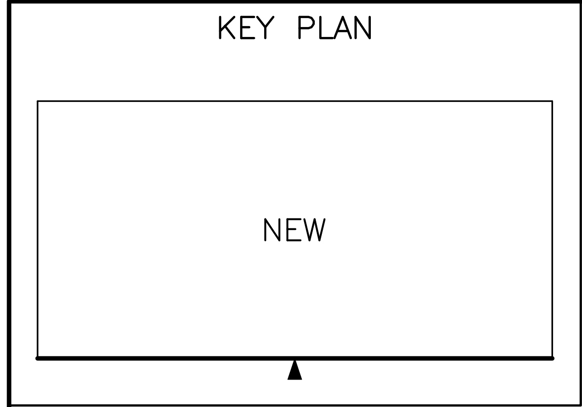

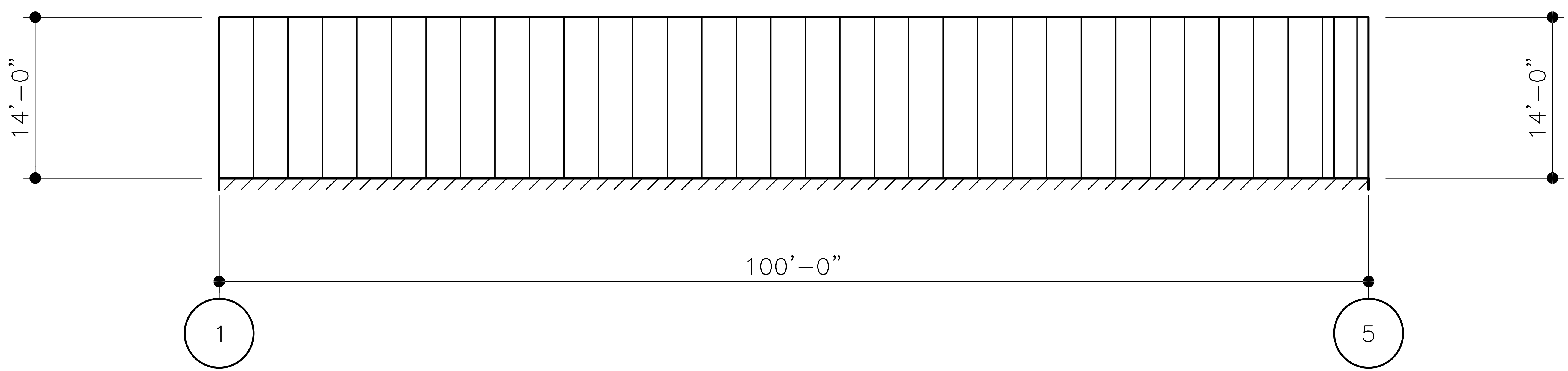

WALL SHEETING ELEVATION AT LINE C

PANELS: 26 GA. R–PANEL – TO BE SELECTED (PVDF)

PROJECT NAME:
OCONEE SHOP
WATKINSVILLE, GA
CUSTOMER NAME:
RIDDLE ARCHICTECTURE
WATKINSVILLE, GA

DO NOT USE FOR FINAL CONSTRUCTION

7/15/2026 9:02 AM

SHEET TITLE:
PRELIMINARY SHEETING ELEVATIONS

QUOTE NUMBER:
K2F–25023 R1

SHEET NUMBER:
WS6

KEY PLAN

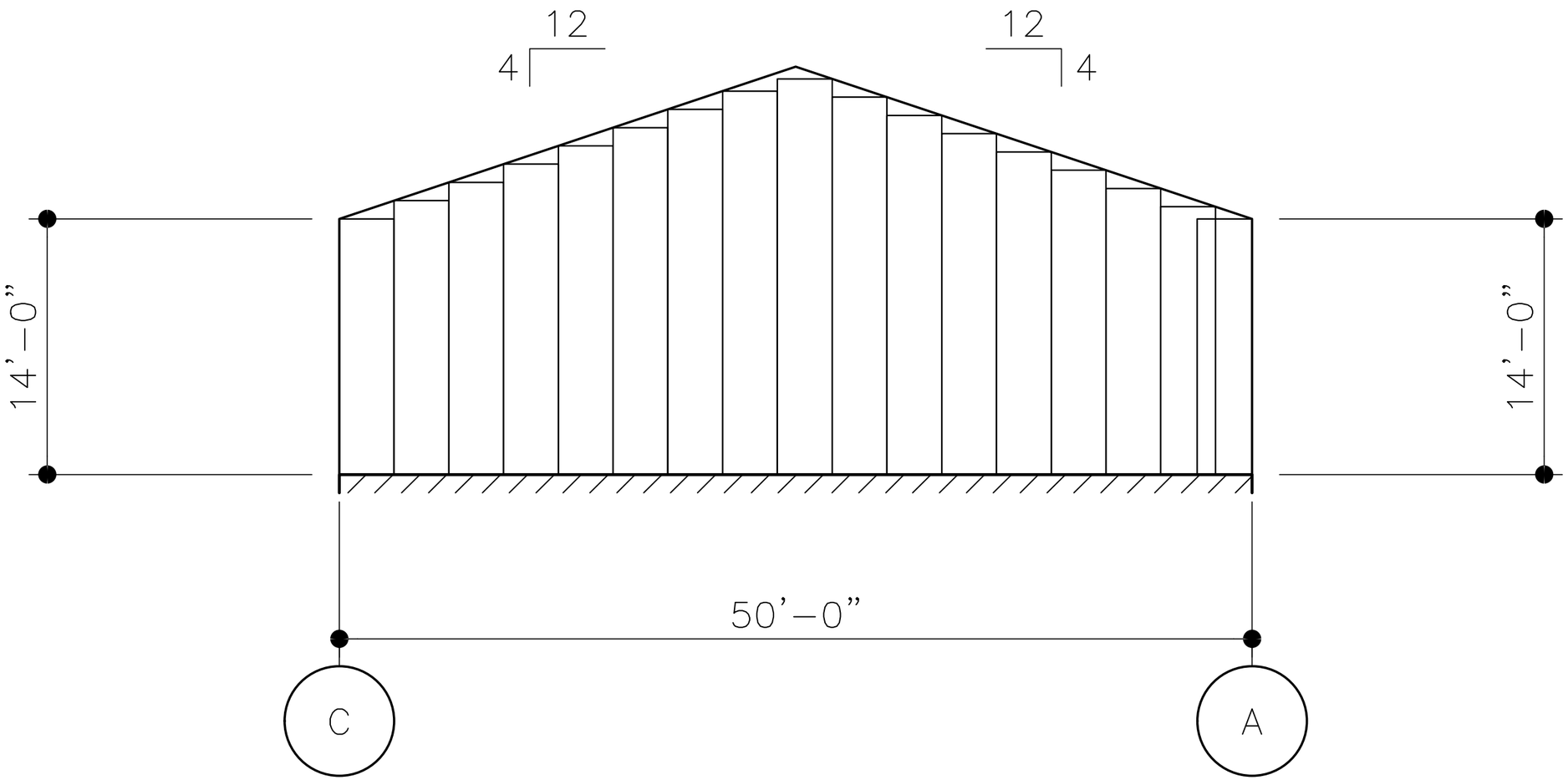

WALL SHEETING ELEVATION AT LINE 5

PANELS: 26 GA. R–PANEL – TO BE SELECTED (PVDF)

KIRBY BUILDING SYSTEMS
A RUSSER COMPANY
Drawing Generated By eQuote

PROJECT NAME: OCONEE SHOP
WATKINSVILLE, GA
CUSTOMER NAME: RIDDLE ARCHICTECTURE
WATKINSVILLE, GA

DO NOT USE FOR FINAL CONSTRUCTION

7/15/2026 9:02 AM

SHEET TITLE: PRELIMINARY SHEETING ELEVATIONS
SHEET NUMBER: WS7
QUOTE NUMBER: K2F–25023 R1

KEY PLAN

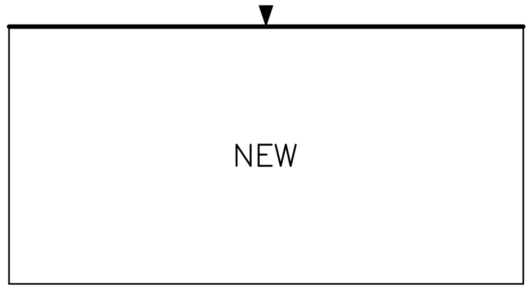

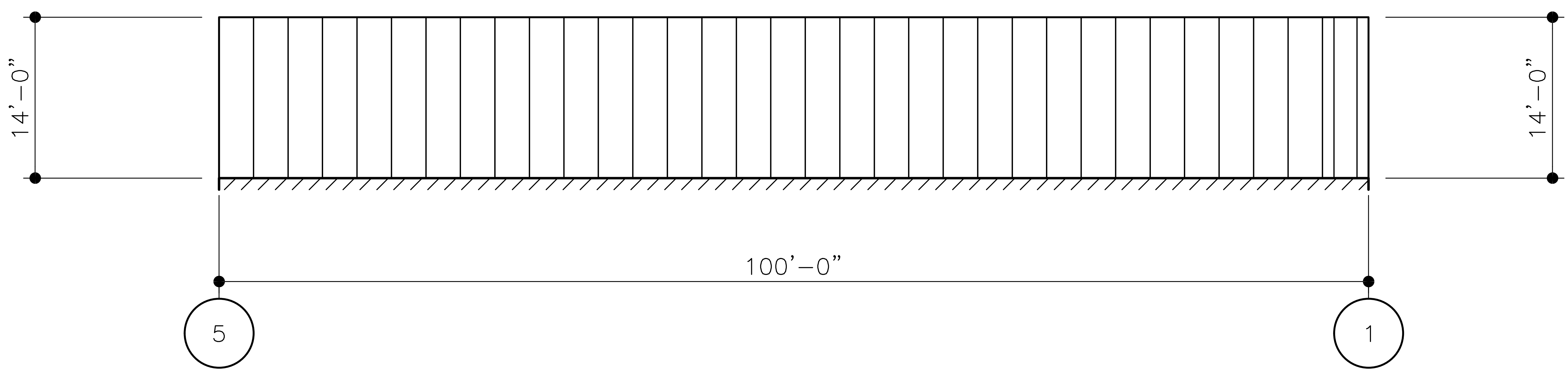

WALL SHEETING ELEVATION AT LINE A

PANELS: 26 GA. R–PANEL – TO BE SELECTED (PVDF)

KIRBY BUILDING SYSTEMS
A NUCOR COMPANY
Drawing Generated By eQuote

PROJECT NAME:
OCONEE SHOP
WATKINSVILLE, GA

CUSTOMER NAME:
RIDDLE ARCHICTECTURE
WATKINSVILLE, GA

DO NOT USE FOR FINAL CONSTRUCTION

7/15/2026 9:02 AM

SHEET TITLE:
PRELIMINARY SHEETING ELEVATIONS

QUOTE NUMBER:
K2F–25023 R1

SHEET NUMBER:
WS8