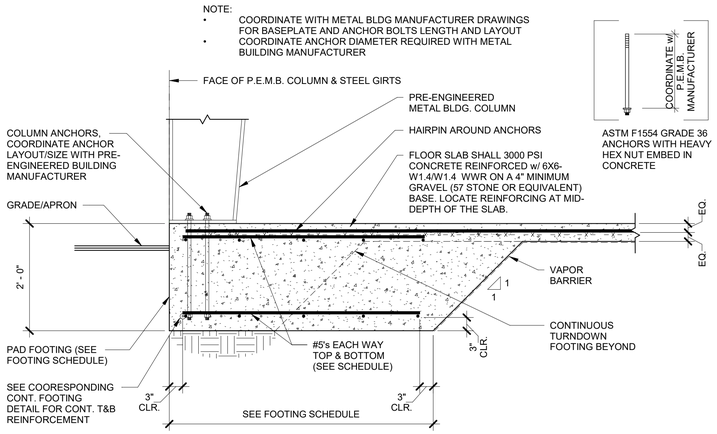

1 S3.1 FOUNDATION SECTION
3/4" = 1'-0"

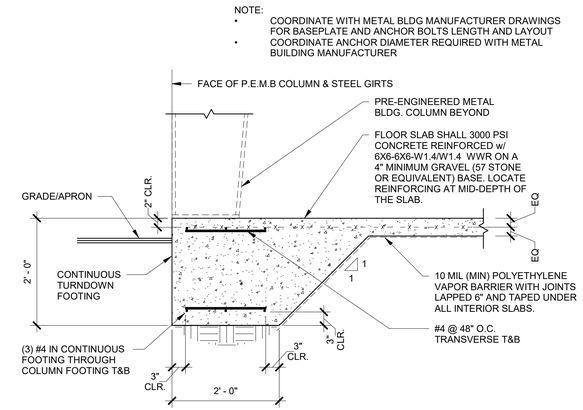

2 S3.1 FOUNDATION SECTION
3/4" = 1'-0"

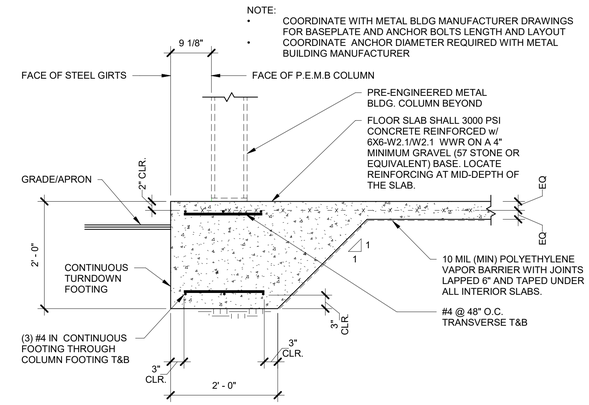

4 S3.1 FOUNDATION SECTION
3/4" = 1'-0"

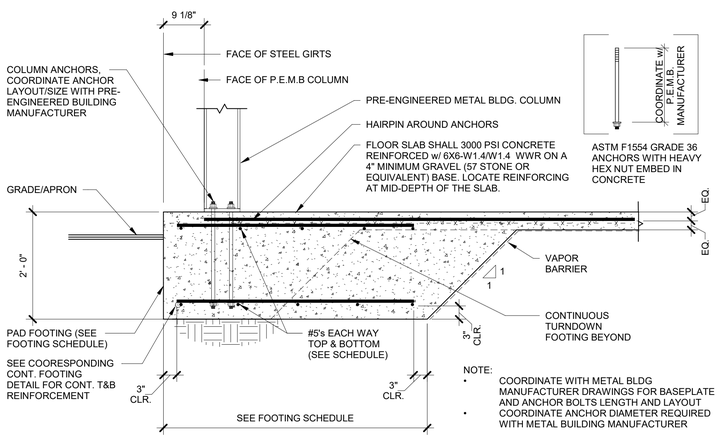

3 S3.1 FOUNDATION SECTION
3/4" = 1'-0"

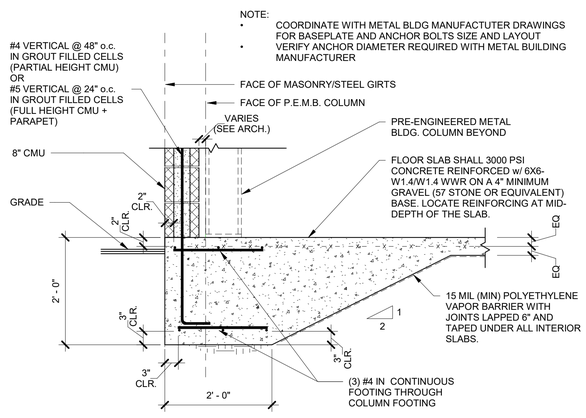

5 S3.1 WALL SECTION
3/4" = 1'-0"

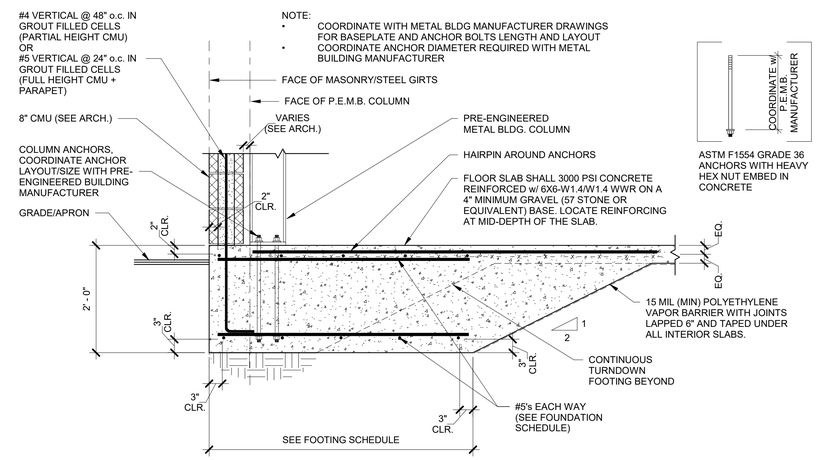

6 S3.1 WALL SECTION
3/4" = 1'-0"

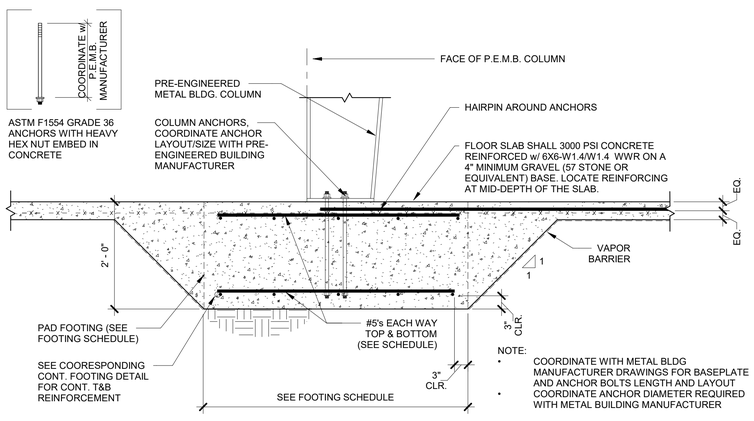

7 S3.1 FOUNDATION SECTION
3/4" = 1'-0"

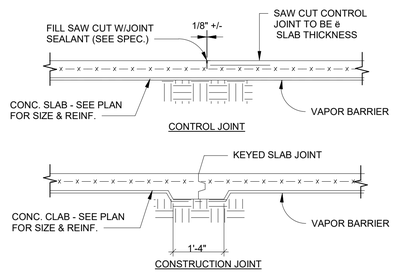

NOTES: SAW CUT AS SOON AS SLAB CAN SUPPORT WEIGHT (4 HRS MAX.) ANY CONTROL JOINT MAY BE REPLACED WITH A CONSTRUCTION JOINT

9 S3.1 CONTROL JOINT DETAILS
3/4" = 1'-0"

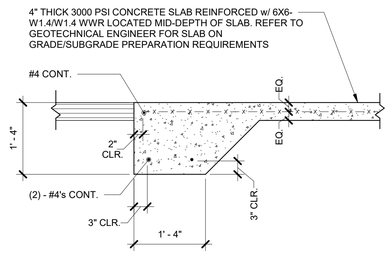

8 S3.1 EDGE TURN-DOWN @ CONCRETE APRON PADS
3/4" = 1'-0"

Keystone Structural Engineering
Professional Consultants
531 Roselane Street
Suite 150
Marietta, GA 30060
(404) 635-0621

PRICING ONLY NOT FOR CONSTRUCTION

Rev. No.	Date	Name

PROGRESS SET

PROJECT
Peach State Construction Company Office

ADDRESS
Unknown

CLIENT
CSC DESIGN, INC.
ARCHITECTS & ENGINEERS

ADDRESS
135 P. Rickman Industrial Dr.
Suite 100, Canton, GA 30115

SHEET TITLE
PRICING ONLY NOT FOR CONSTRUCTION
FOUNDATION DETAILS

Date:
02/09/2026

PROJECT NUMBER
26-114

SHEET NUMBER
S3.1

2/11/2026 1:55:54 PM
C:\Users\EMILY\OneDrive - Keystone Structural Engineering
C:\Users\emily\AppData\Local\Temp\acpublish_11176\S3.1.dwg