CSC.2024.01.007

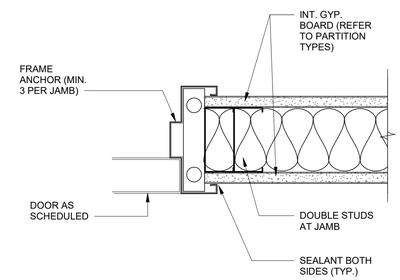

J6 HM TYP. JAMB
A-803 | 3" = 1'-0"

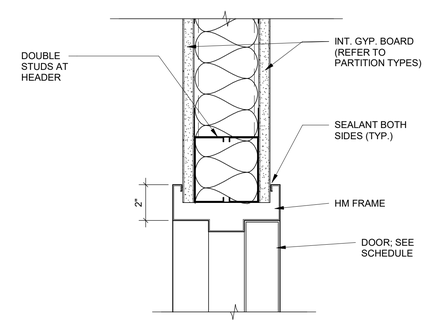

H6 HM TYP. DETAIL
A-803 | 3" = 1'-0"

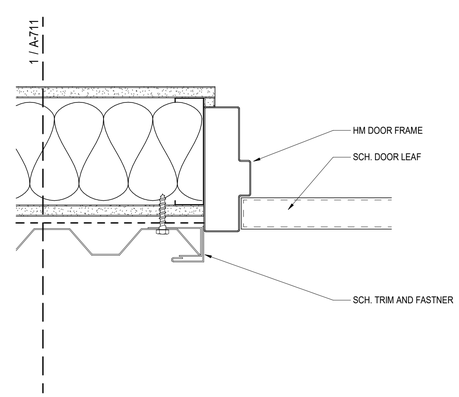

J4 HM DOOR JAMB - METAL, VERT. MWP
A-803 | 3" = 1'-0"

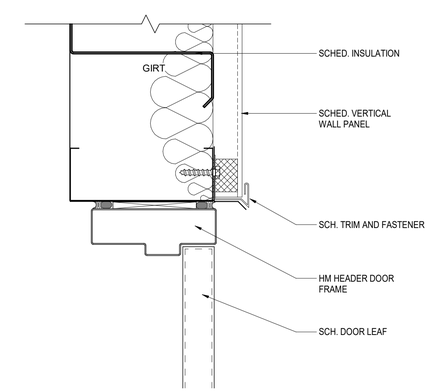

H1 HM DOOR HEAD - ZEE, VERT. MWP
A-803 | 3" = 1'-0"

CSC DESIGN, INC.
ARCHITECTS & ENGINEERS
135 P RICKMAN INDUSTRIAL DR.
SUITE 100 CANTON, GA 30115
Phone: (770) 345-2579

© 2025, CSC Design. These drawings are protected by the copyright laws of the United States. These drawings or any part thereof may not be used for any purpose or reproduced in any form or by any means without the written consent of CSC Design.

STATE OF GEORGIA
KEVIN B. WHIPPLE
04/28/2026
CERTIFICATE NO. RA014856
REGISTERED ARCHITECT

PROJECT NUMBER: 25-038

REVISIONS		
NO:	DATE:	ISSUE:

PEACH STATE CONSTRUCTION COMPANY OFFICE

265 PIPER ROAD
COVINGTON, GA 30014
NEWTON COUNTY, GEORGIA

DOOR HEAD & JAMB DETAILS - HM, METAL

A-803

ISSUED FOR CONSTRUCTION

4/28/2026 4:13:45 PM Y:\Projects\25-038 Peach State Construction Office_Covington, GA\Arch\00 REVIT\25-038 Peach State Construction Office.rvt