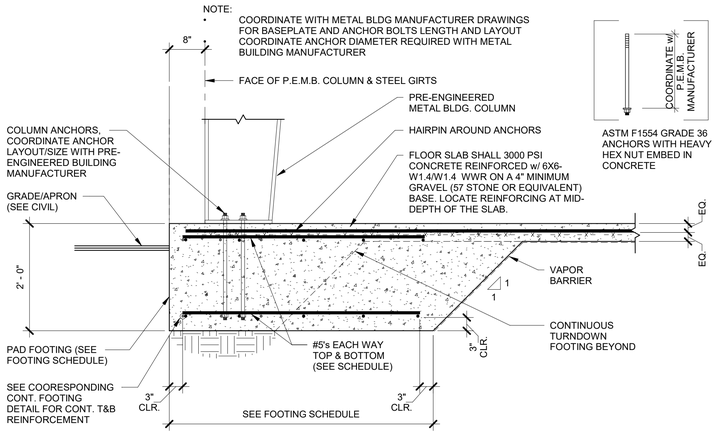

1 S3.1 FOUNDATION SECTION
3/4" = 1'-0"

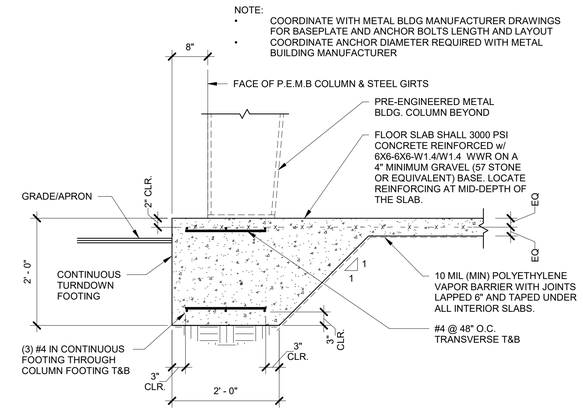

2 S3.1 FOUNDATION SECTION
3/4" = 1'-0"

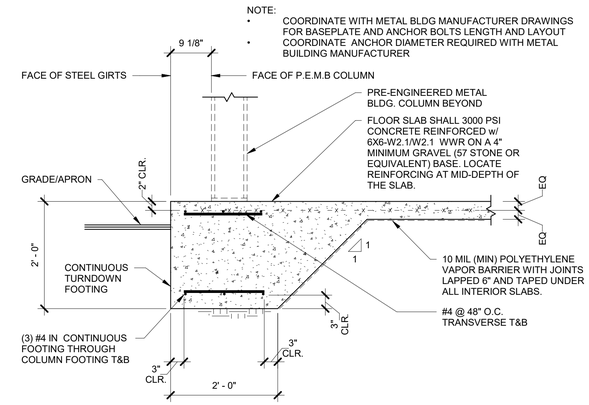

4 S3.1 FOUNDATION SECTION
3/4" = 1'-0"

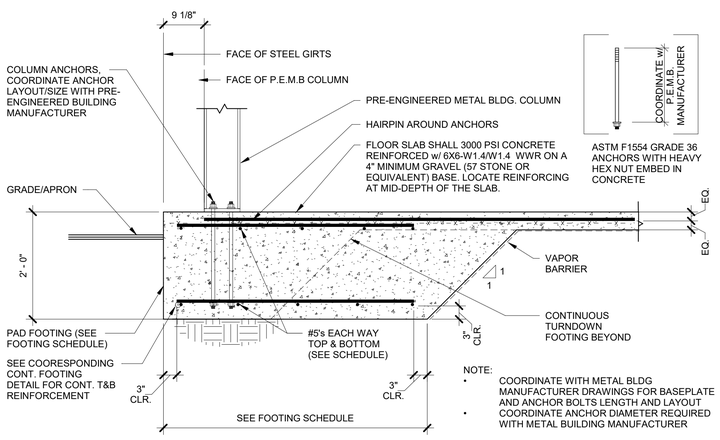

3 S3.1 FOUNDATION SECTION
3/4" = 1'-0"

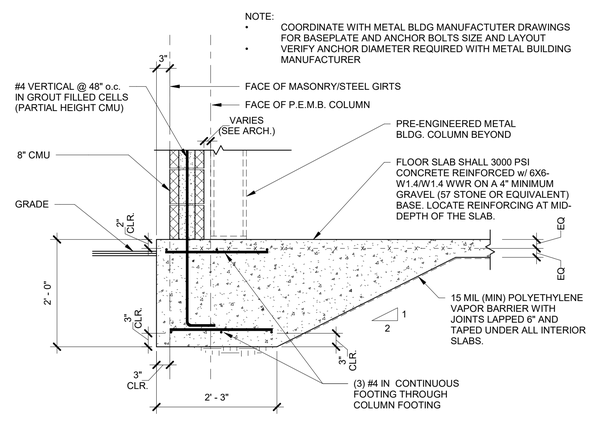

5 S3.1 WALL SECTION
3/4" = 1'-0"

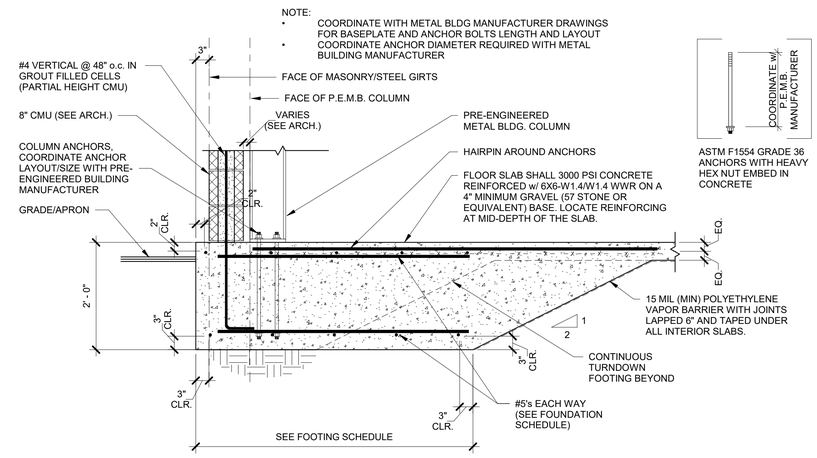

6 S3.1 WALL SECTION
3/4" = 1'-0"

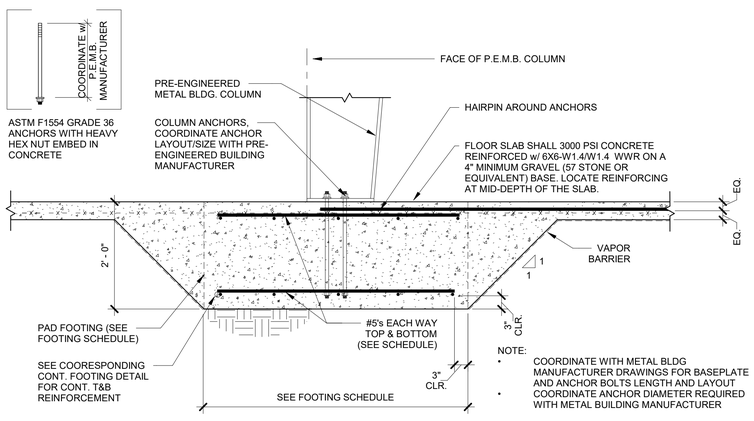

7 S3.1 FOUNDATION SECTION
3/4" = 1'-0"

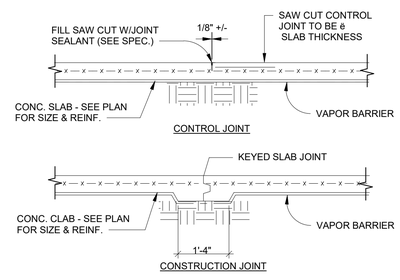

NOTES: SAW CUT AS SOON AS SLAB CAN SUPPORT WEIGHT (4 HRS MAX.) ANY CONTROL JOINT MAY BE REPLACED WITH A CONSTRUCTION JOINT

9 S3.1 CONTROL JOINT DETAILS
3/4" = 1'-0"

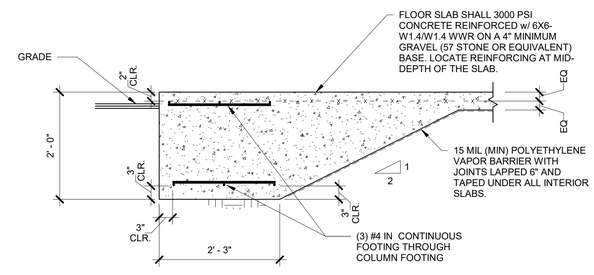

8 S3.1 EDGE TURN-DOWN @ CONCRETE APRON PADS
3/4" = 1'-0"

Keystone Structural Engineering
Professional Consultants
531 Roselane Street
Suite 150
Marietta, GA 30060
(404) 483 6921

GEORGIA REGISTERED No. 30077 PROFESSIONAL ENGINEER BRENDAN F. CROMEY

Rev. No.	Date	Name

ISSUED FOR CONSTRUCTION

PROJECT
Peach State Construction Company Office

ADDRESS
265 Piper Road
Covington, GA 30014

CLIENT
CSC DESIGN, INC.
ARCHITECTS & ENGINEERS

ADDRESS
135 P. Rickman Industrial Dr.
Suite 100, Canton, GA 30115

SHEET TITLE
FOUNDATION DETAILS

Date:
04/24/2026

PROJECT NUMBER
26-114

SHEET NUMBER
S3.1

4/24/2026 5:03:31 PM
C:\Users\EMILY\OneDrive - Keystone Structural Engineering,
C:\Users\emily\AppData\Local\Temp\acpublish_6124