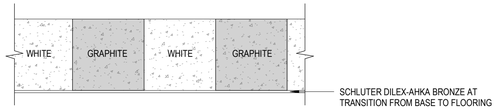

13 ENLARGED TILE BASE DETAIL
1 1/2" = 1'-0"

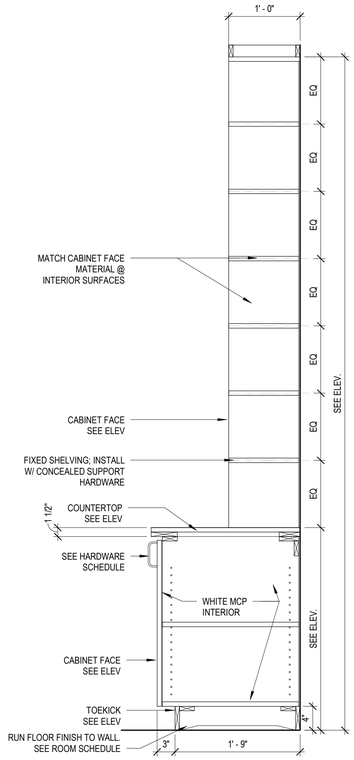

10 BUILT-IN BOOKSHELVES
1" = 1'-0"

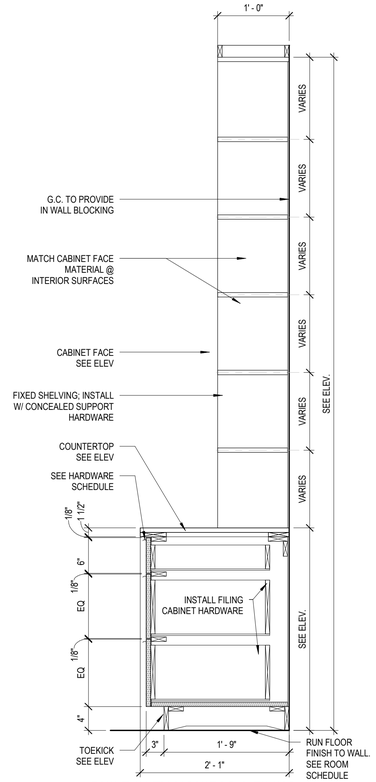

9 BUILT-IN TV MONITOR & FILING CABINETS
1" = 1'-0"

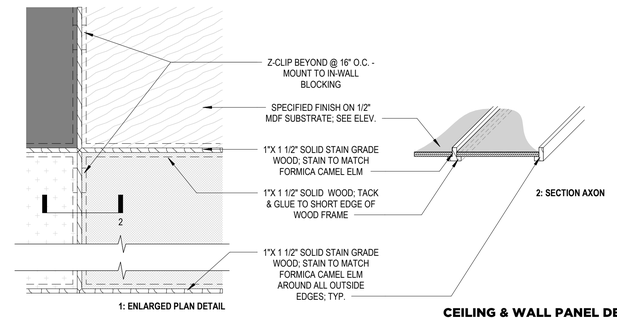

12 CEILING & WALL PANEL DETAILS @ SHARED CONFERENCE
1 1/2" = 1'-0"

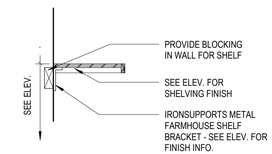

11 DETAIL - OPEN SHELVING
1" = 1'-0"

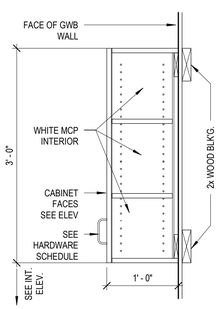

8 CABINET - UPPER
1" = 1'-0"

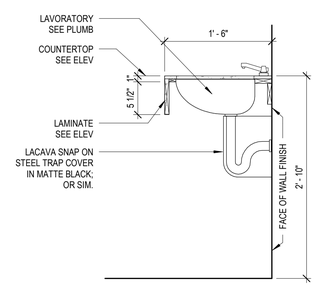

7 MILLWORK - ADA VANITY SINK
1" = 1'-0"

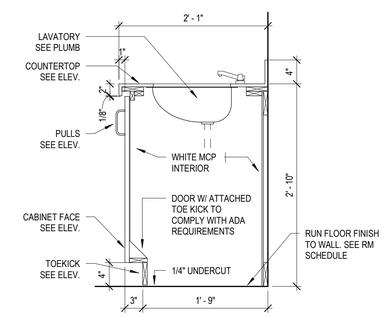

6 MILLWORK - SINK UNDERMOUNT W/ CABINET
1" = 1'-0"

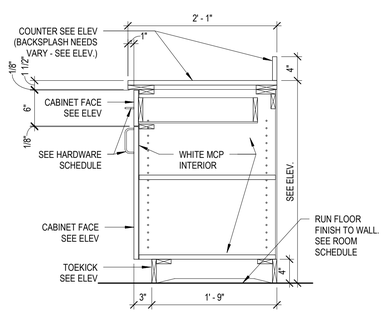

5 CABINET - BASE W/ DRAWER
1" = 1'-0"

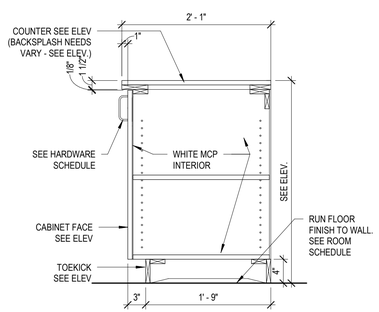

4 CABINET - BASE W/ DOOR
1" = 1'-0"

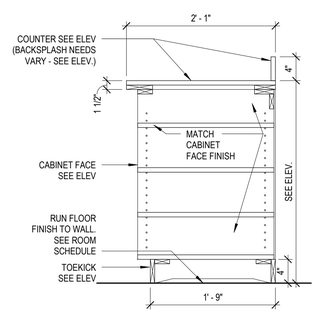

3 CABINET - BASE W/ OPEN SHELVING
1" = 1'-0"

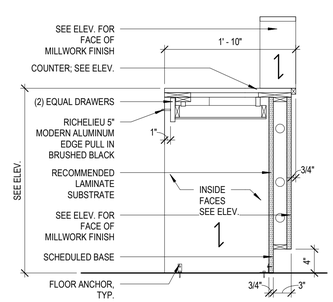

2 MILLWORK - ADA RECEPTION
1" = 1'-0"

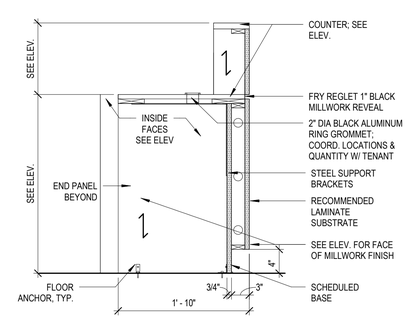

1 MILLWORK - RECEPTION TRANSACTION LEDGE
1" = 1'-0"

CREATIVE LICENSE
architecture • interiors • procurement • (404)964-5490 • www.creativelicense.studio

#	DATE	TITLE

PROJECT NUMBER:
26-002

1167 PACE ST. - PHASE I

1167 PACE ST, COVINGTON, GA

REGISTERED ARCHITECT DANNY ENGLAND NO. 3481 STATE OF GEORGIA

RELEASED FOR CONSTRUCTION

MILLWORK ELEVATIONS @ DETAILS

ID501

6/15/2026 9:41:30 AM